VENTA®

BY BÜCHIN DESIGN

2026

"We have invested all of our energy into making our furniture as functional as possible, but with such elegant designs that this is not immediately obvious."
Karl Büchin, General Manager Büchin Design, Berlin

Büchin Design develops, builds and sells individual furniture for the hotel industry and events catering business under the brand name „VENTA by Büchin Design“.

The high-quality buffet furniture includes exclusive cocktail tables and stylish buffet tables as well as matching modern stools. Most VENTA furnishings can be folded up or stacked together to save space, and can be assembled and disassembled in just a few easy steps, without the need for any tools.

All of our buffet furniture is mobile and can be used anywhere. It meets the high demands of the hotel, events and catering industry in every respect.

Our VENTA products have an exclusive design and are available worldwide.

Most of our VENTA products are manufactured in Germany, and we are pleased to appear with the “Made in Germany” seal at trade fairs both in Germany and abroad.

00 Lookbook Impressions

page 6

Schlosshotel Berlin by Patrick Hellmann page 6
Marriott Hotel München page 10
Aviator Hotel Hampshire page 13
Mondrian Hotel Doha page 14
Lindner Hotel Düsseldorf page 16

01 Buffet Tables (on castors)

page 18

Castor sizes page 22
Stage 80 tables page 24
Stage 50 tables page 30

02 System with two Table Tops (on castors)

page 36

Stage 80 S tables & table-tops page 38
Stage 50 S tables & table-tops page 42

03 Action Stations (on castors)

page 44

Induction tables page 46
Chafing-dish page 62
Cool and hot buffet page 72
Cold buffet page 82
Elements page 94

04 Buffet Accessoiries

page 110

Front- & sideblinds page 112
Aperture & shelf page 120
Heat bridge & heat lamp page 130
Sneezeguard & frontshield page 144
Etagere page 156
Plate warmer page 160

05 Special Buffet Furniture

page 164

Service cart page 166
Quad 230 page 167
Corner tables page 168
Duck station page 173
Table rack page 174

06 Foldable Buffet Tables

page 176

Scape page 178
Level page 185

07 Cocktail Tables + Bar Area

page 186

Set cocktail tables page 188
LED frame page 194
Plate & by page 202
Hospi desk page 204
Backbar page 206
ELEMENTS - Mobile bar page 212

08 Service Furniture

page 222

Coffee station page 224
Cupboard page 226
Rack page 229

09 Equipment for all Furniture

page 232

Heavy load strut & cable duct page 234
Rollerskate quadro & silicone pad page 237
Plugbar & cables page 240
Protective cover page 243
LED panels page 244
Lectern page 246

10 Material + Color

page 250

Metal colors page 252
Glass colors page 253
Compact panel & chipboard colors page 254
Plywood with HPL colors page 256
Polyester colors page 257

11 Partner & Reseller References Worldwide

page 258

Showroom Munich - Germany page 260
Showroom Düsseldorf - Germany page 262
Zieher (partner) page 264
Frilich (partner) page 266
References worldwide page 268

Spicy Pumpkin
Sunflower Seeds
Whole Grain Bread
Avocado, Egg

Apple Cookies,
Peanut Butter
Farm Fresh
Apple Juice
Quinoa
Berber Muesli
Salmon Apple
Cookie

VEGETARIAN FAVORITE
SOUP OF THE DAY

table-top: compact panel
decor: Dark Grey Chicago Concrete (415)

Buffet Tables on castors

STAGE_80 | STAGE_50

all tables nested and adjusted at the lowest height

Item No.: 81001
L: 1960 x 800 x 935 mm
M: 1800 x 800 x 855 mm
2 x XS: 800 x 800 x 775 mm
total weight: 119,8 kg

STAGE – the modular buffet system

modern look & easy to move
simple, functional, good-looking.

The modular buffet table system STAGE_80 can be assembled and disassembled in just a few easy steps, without the need for any tools.

The trolley system allows you to storage all four tables in a mobile wooden box on wheels.

explosion view/
main parts

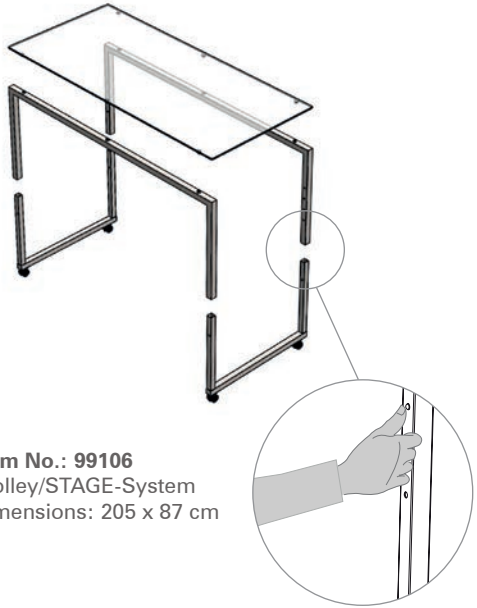

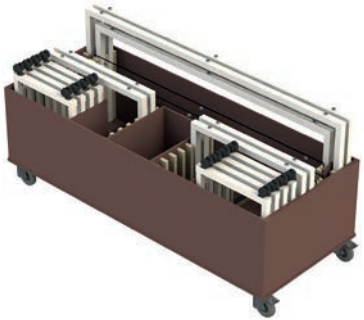

Item No.: 99106
Trolley/STAGE-System
dimensions: 205 x 87 cm

total buffet length: 536 cm

all tables in a row/adjusted at the same height

Features

SYSTEM SIZE – table system available in three standard lengths (L=196 cm, M=180 cm, 2 x XS=80 cm).

NESTING – the three standard sizes can be pushed together, so that only 1,96 m of the 5,36 m buffet table length is required as NESTING system.

COMBINE – system available in two table depths, 80 cm = classic buffet size/50 cm = table depth for smaller meeting rooms. Combinations of the two table depths result in interesting buffet variants or e.g. a MOBILE BAR.

ADAPTIVE – each table can be optimised for the respective area of use with additional equipment (e.g. shelves below the table surface for use as a plate shelf).

CHANGEABLE – a light, elegant buffet system consisting only a metal frame for the table legs and a transparent glass top. Or a buffet system with full equipment including appliances for heating and cooling, thermal bridges, shelves and blinds – STAGE can do both.

FUNCTIONAL – wheel diameter in three sizes suitable for the application: small = in the room or on the floor/medium = in the whole hotel, also suitable for lifts or smaller thresholds/large = inhouse and outdoor, also usable on the terrace.

ADJUSTABLE HEIGHT – four table heights can be adjusted at each table in a grid of 8 cm, thus enabling an interesting and varied furniture construction.

MOBILE – buffet table on wheels, which can be moved in any room and throughout the hotel, all wheels are lockable to fix the table in place.

STORAGE – if required, the system can be dismantled without tools and stowed in trolleys (wooden boxes on wheels), each part has a fixed place due to a grid system and cannot be damaged during transport.

COLOR – elegant lacquering of the table frames and the table tops (underside of the glass tops), so the matching color to the room concept is selectable.

DECOR – table tops available in „compact top“ material with various decorative surfaces (photo reproduction: wood, stone, metal).

BLINDS – various decor panels to choose from, variants from completely closed to translucent, can be quickly assembled and disassembled by magnet attachment, enables „invisible supply“.

Three castor sizes for STAGE buffet tables – generally recommended for indoor use.

Ø = 50 mm/suitable for using on all grounds, but at the same level.

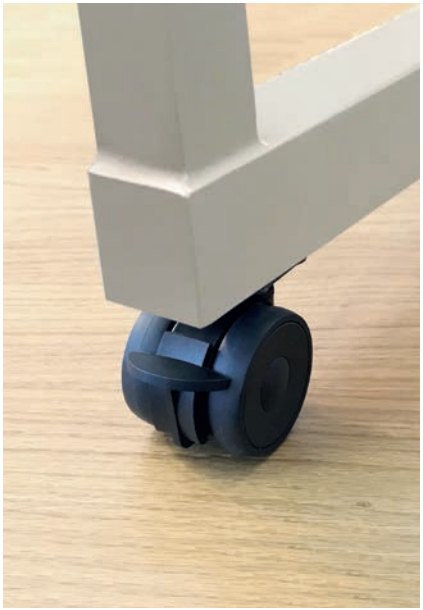

Ø = 65 mm/standard size suitable for using an elevator (to cross the gap), for longer distance and high pile carpet.

Ø = 75 mm/suitable for using anywhere, especially for catering purposes.

Castor sizes –
influence the height of the tables | all sizes useable for buffet purpose

table height: 92,0 cm
Ø = 50 mm

table height: 93,5 cm
Ø = 65 mm

table height: 94,5 cm
Ø = 75 mm

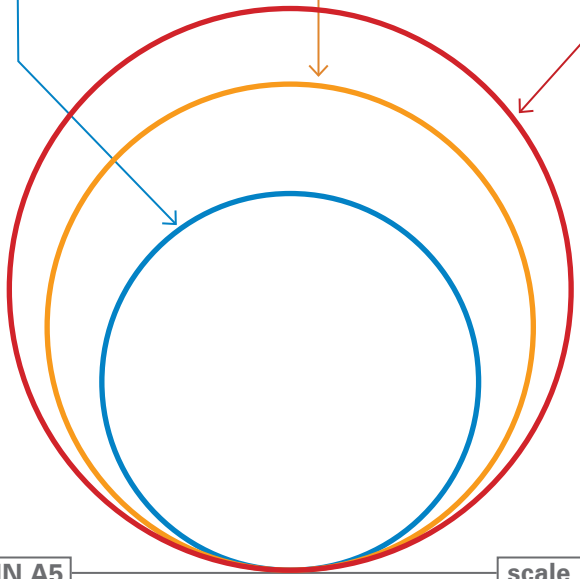

DIN A5 — scale 1:1

standard size / Ø = 65 mm

STAGE_80 | set of 4 tables

Item No.: 81001
L: 1960 x 800 x 935 mm
M: 1800 x 800 x 855 mm
2 x XS: 800 x 800 x 775 mm
total weight: 119,8 kg

Base (inkl. castors)
steel, powder-coated
profile 40 x 40 mm, with height compensation
weight: 18,3 kg, 17,3 kg, 2 x 13,3 kg

Table-top
compact laminate 10 mm,
weight: 21 kg, 19 kg, 2 x 8,8 kg

Height adjustable-system
L: 935, 1015, 1095, 1175 mm
M: 855, 935, 1015, 1095 mm
XS: 775, 855, 935, 1015 mm

connection between table-top and base

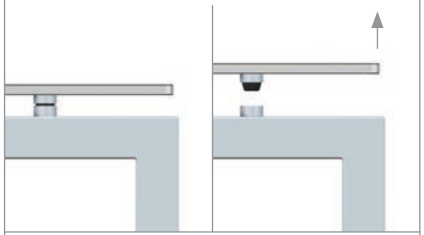

height can be adjusted (77,5-117,5 cm)

arrangement of the four buffet tables

Item No.: 99106
Trolley for 1 x STAGE_80 (set of 4 tables)

weight: 85 kg [empty] / 204,8 kg [full]

MATERIAL+COLOR

basic
base: 100, 101
table-top: 300, 465, 466

option
all available colors in chapter MATERIAL+COLOR

STAGE_80 | set of 3 tables

Item No.: 81094
L: 1960 x 800 x 935 mm
M: 1800 x 800 x 855 mm
S_164: 1640 x 800 x 775 mm
total weight: 155,3 kg

Base
steel, powder-coated
profile 40 x 40 mm, with height compensation
weight: 18,3 kg, 17,3 kg, 15,7 kg

Table-top
compact laminate 10 mm,
weight: 21 kg, 19 kg, 2 x 17 kg

Height adjustable-system
L: 935, 1015, 1095, 1175 mm
M: 855, 935, 1015, 1095 mm
S_164: 775, 855, 935, 1015 mm

connection between table-top and base

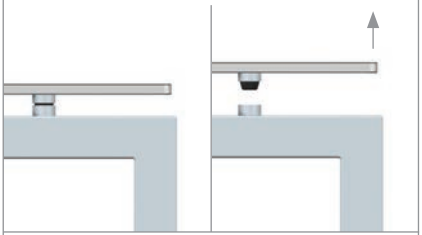

height can
be adjusted
(77,5-117,5 cm)

Item No.: 99106
Trolley for 1 x STAGE_80 (set of 3 tables)

weight: 85 kg [empty] / 240,3 kg [full]

MATERIAL+COLOR

basic
base: 100, 101
table-top: 300, 465, 466

option
all available colors in chapter
MATERIAL+COLOR

STAGE_80_L

Item No.: 81002
[LxWxH]: 1960 x 800 x 935 mm
total weight: 39,3 kg

Base
2 x main frame 11,6 kg
2 x table leg 6,2 kg
steel, powder-coated
profile 40 x 40 mm, with height compensation

4 x Castor
diameter = 65 mm
weight: 0,5 kg

Height adjustable:
935 mm (lowest height)
1015, 1095, 1175 mm

Table-top
compact laminate 10 mm,
weight: 21 kg

Alternative:

Table-top
safety glass 10 mm
weight: 38 kg

height can be adjusted (93,5-117,5 cm)

MATERIAL+COLOR

basic
base: 100, 101
table-top: 300, 465, 466

option
all available colors in chapter MATERIAL+COLOR

assembly of individual parts without tools

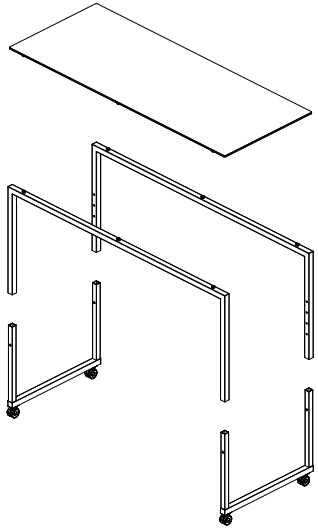

Item No.: 99107
Trolley for 4 x STAGE_80_L (maximum load)

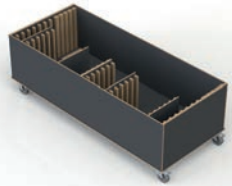

weight: 85 kg [empty] / 242,2 kg [full]

STAGE_80_M

Item No.: 81003
[LxWxH]: 1800 x 800 x 855 mm
total weight: 35,8 kg

Base
2 x main frame 10,6 kg
2 x table leg 6,2 kg
steel, powder-coated
profile 40 x 40 mm, with height compensation

4 x Castor
diameter = 65 mm
weight: 0,5 kg

Height adjustable:
855 mm (lowest height)
935, 1015, 1095 mm

Table-top
compact laminate 10 mm,
weight: 19 kg

Alternative:

Table-top
safety glass 10 mm
weight: 35 kg

height can be adjusted (85,5-109,5 cm)

MATERIAL+COLOR

basic
base: 100, 101
table-top: 300, 465, 466

option
all available colors in chapter MATERIAL+COLOR

assembly of individual parts without tools

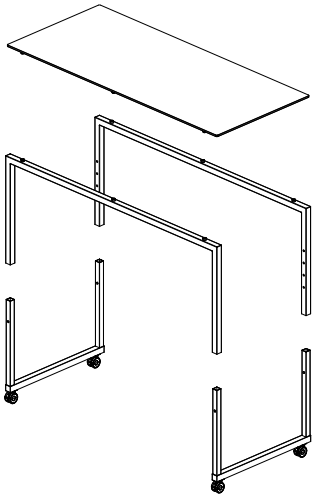

Item No.: 99109
Trolley for 4 x STAGE_80_M (maximum load)

weight: 75 kg [empty] / 218,2 kg [full]

STAGE_80_S_164

Item No.: 81056
[LxWxH]: 1640 x 800 x 775 mm
total weight: 32,7 kg

Base
2 x main frame 9,0 kg
2 x table leg 6,2 kg
steel, powder-coated
profile 40 x 40 mm, with height compensation

4 x Castor
diameter = 65 mm
weight: 0,5 kg

Height adjustable:
755 mm (lowest height)
855, 935, 1015 mm

Table-top
compact laminate 10 mm,
weight: 17 kg

Alternative:

Table-top
safety glass 10 mm
weight: 31 kg

height can be adjusted (77,5-101,5 cm)

MATERIAL+COLOR

basic
base: 100, 101
table-top: 300, 465, 466

option
all available colors in chapter MATERIAL+COLOR

assembly of individual parts without tools

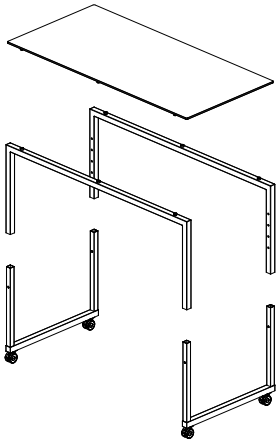

Item No.: 99123
Trolley for 4 x STAGE_80_S_164 (maximum load)

weight: 72 kg [empty] / 229,2 kg [full]

STAGE_80_XS

Item No.: 81004
[LxWxH]: 800 x 800 x 775 mm
total weight: 22,1 kg

Base
2 x main frame 6,6 kg
2 x table leg 6,2 kg
steel, powder-coated
profile 40 x 40 mm, with height compensation

4 x Castor
diameter = 65 mm
weight: 0,5 kg

Height adjustable:
775 mm (lowest height)
855, 935, 1015 mm

Table-top (VE-14016)
compact laminate 10 mm,
weight: 8,8 kg

Alternative:

Table-top
safety glass 10 mm
weight: 15 kg

height can be adjusted (77,5-101,5 cm)

MATERIAL+COLOR

basic
base: 100, 101
table-top: 300, 465, 466

option
all available colors in chapter MATERIAL+COLOR

assembly of individual parts without tools

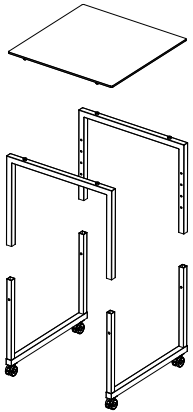

Item No.: 99114
Trolley for 4 x STAGE_80_XS (maximum load)

weight: 48 kg [empty] / 191,2 kg [full]

STAGE_50 | set of 4 tables

Item No.: 51001
L: 1960 x 500 x 935 mm
M: 1800 x 500 x 855 mm
2 x XS: 800 x 500 x 775 mm
total weight: 98,0 kg

Base (inkl. castors)
steel, powder-coated
profile 40 x 40 mm, with height compensation

Table-top
compact laminate 10 mm

Height adjustable-system
L: 935, 1015, 1095, 1175 mm
M: 855, 935, 1015, 1095 mm
XS: 775, 855, 935, 1015 mm

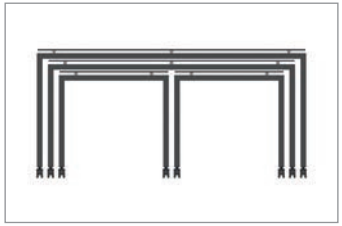

connection between table-top and base

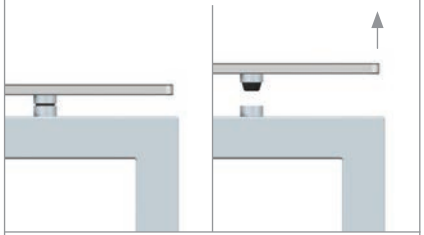

arrangement of the four buffet tables

height can be adjusted (77,5-117,5 cm)

table on castors

MATERIAL+COLOR

basic
base: 100, 101
table-top: 300, 465, 466

option
all available colors in chapter MATERIAL+COLOR

Item No.: 99106
Trolley for 1 x STAGE_50 (set of 4 tables)

weight: 75 kg [empty] / 173,0 kg [full]

STAGE_50 | set of 3 tables

Item No.: 51050
L: 1960 x 500 x 935 mm
M: 1800 x 500 x 855 mm
S_164: 1640 x 500 x 775 mm
total weight: 87,0 kg

Base
steel, powder-coated
profile 40 x 40 mm, with height compensation

Table-top
compact laminate 10 mm

Height adjustable-system
L: 935, 1015, 1095, 1175 mm
M: 855, 935, 1015, 1095 mm
S_164: 775, 855, 935, 1015 mm

connection between table-top and base

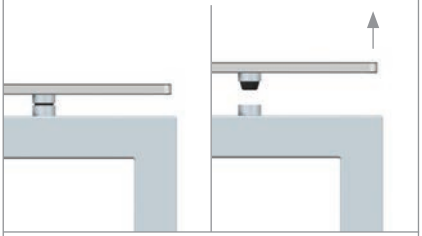

height can be adjusted
(77,5-117,5 cm)

table on castors

MATERIAL+COLOR

basic
base: 100, 101
table-top: 300, 465, 466

option
all available colors in chapter MATERIAL+COLOR

Item No.: 99106
Trolley for 1 x STAGE_50 (set of 3 tables)

weight: 75 kg [empty] / 162,0 kg [full]

STAGE_50_L

Item No.: 51002
[LxWxH]: 1960 x 500 x 935 mm
total weight: 32,1 kg

Base
2 x main frame 11,6 kg
2 x table leg 5,0 kg
steel, powder-coated
profile 40 x 40 mm, with height compensation

4 x Castor
diameter = 65 mm
weight: 0,5 kg

Height adjustable:
935 mm (lowest height)
1015, 1095, 1175 mm

Table-top
compact laminate 10 mm,
weight: 15,0 kg

Alternative:

Table-top
safety glass 10 mm
weight: 24,0 kg

height can be adjusted (93,5-117,5 cm)

MATERIAL+COLOR

basic
base: 100, 101
table-top: 300, 465, 466

option
all available colors in chapter MATERIAL+COLOR

assembly of individual parts without tools

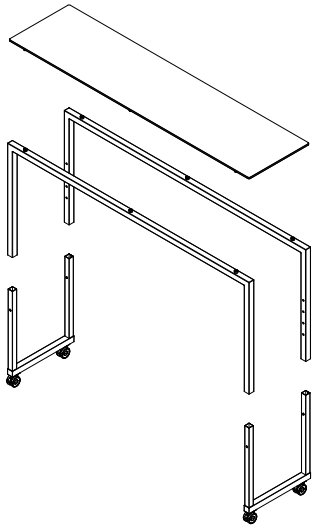

Item No.: 99109
Trolley for 4 x STAGE_50_L (maximum load)

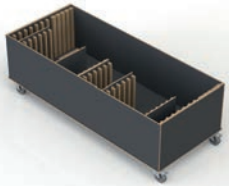

weight: 75 kg [empty] / 203,4 kg [full]

STAGE_50_M

Item No.: 51003
[LxWxH]: 1800 x 500 x 855 mm
total weight: 29,1 kg

Base
2 x main frame 10,6 kg
2 x table leg 5,0 kg
steel, powder-coated
profile 40 x 40 mm, with height compensation

4 x Castor
diameter = 65 mm
weight: 0,5 kg

Height adjustable:
855 mm (lowest height)
935, 1015, 1095 mm

Table-top
compact laminate 10 mm,
weight: 13,0 kg

Alternative:

Table-top
safety glass 10 mm
weight: 22,0 kg

height can be adjusted (85,5-109,5 cm)

MATERIAL+COLOR

basic
base: 100, 101
table-top: 300, 465, 466

option
all available colors in chapter MATERIAL+COLOR

assembly of individual parts without tools

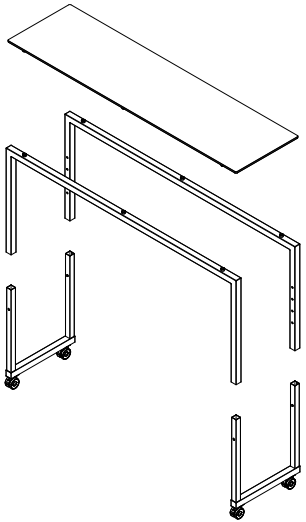

Item No.: 99109
Trolley for 4 x STAGE_80_M (maximum load)

weight: 75 kg [empty] / 191,4 kg [full]

STAGE_50_S_164

Item No.: 51017
[LxWxH]: 1640 x 500 x 775 mm
total weight: 26,5 kg

Base
2 x main frame 9,0 kg
2 x table leg 5,0 kg
steel, powder-coated
profile 40 x 40 mm, with height compensation

4 x Castor
diameter = 65 mm
weight: 0,5 kg

Height adjustable:
775 mm (lowest height)
855, 935, 1015 mm

Table-top
compact laminate 10 mm,
weight: 12,0 kg

Alternative:

Table-top
safety glass 10 mm
weight: 20,0 kg

height can be adjusted (77,5-101,5 cm)

MATERIAL+COLOR

basic
base: 100, 101
table-top: 300, 465, 466

option
all available colors in chapter MATERIAL+COLOR

assembly of individual parts without tools

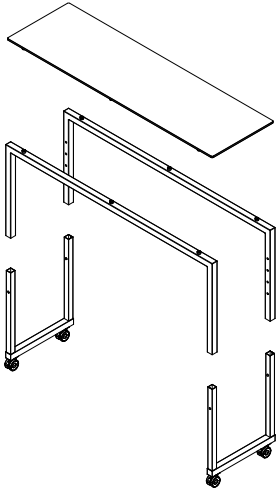

Item No.: 99123
Trolley for 4 x STAGE_50_S_164 (maximum load)

weight: 72 kg [empty] / 178,0 kg [full]

STAGE_50_XS

Item No.: 51004
[LxWxH]: 800 x 500 x 775 mm
total weight: 17,7 kg

Base
2 x main frame 6,6 kg
2 x table leg 5,0 kg
steel, powder-coated
profile 40 x 40 mm, with height compensation

4 x Castor
diameter = 65 mm
weight: 0,5 kg

Height adjustable:
775 mm (lowest height)
855, 935, 1015 mm

Table-top
compact laminate 10 mm,
weight: 5,6 kg

Alternative:

Table-top
safety glass 10 mm
weight: 9,5 kg

height can be adjusted (77,5-101,5 cm)

MATERIAL+COLOR

basic
base: 100, 101
table-top: 300, 465, 466

option
all available colors in chapter MATERIAL+COLOR

assembly of individual parts without tools

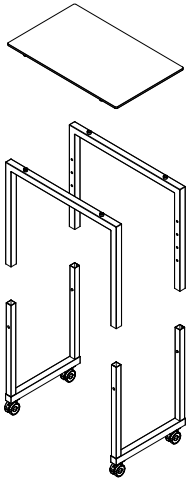

Item No.: 99114
Trolley for 4 x STAGE_50_XS (maximum load)

weight: 48 kg [empty] / 131,6 kg [full]

System with two Table-Tops

STAGE_80_S table | STAGE_50_S_table

STAGE_80_S | system with two separate table-tops

Item No.: 81039
[LxWxH]: 1600 x 800 x 775 mm
total weight: 15,2 kg

Base
2 x main frame 9,0 kg
2 x table leg 6,2 kg
steel, powder-coated
profile 40 x 40 mm, with height compensation

4 x Castor
diameter = 65 mm
weight: 0,5 kg

Height adjustable:
775 mm (lowest height)
855, 935, 1015 mm

Table-top
compact laminate 10 mm,
weight: 8,8 kg

Alternative:

Table-top
safety glass 10 mm
weight: 15,0 kg

order separately: base and table-top

base_STAGE_80_S / Item No.: 81039

table-top XS / Item No.: 14018

explosion view

height can be adjusted (77,5-101,5 cm)

MATERIAL+COLOR

basic
base: 100, 101
table-top: 300, 465, 466

option
all available colors in chapter MATERIAL+COLOR

STAGE_80_S | system with two separate table-tops

>>> create two different functions on the same table base

Item No.: 99122
Trolley for 6 x STAGE_80_S base frames or 6 x STAGE_50_S base frames (maximum load)

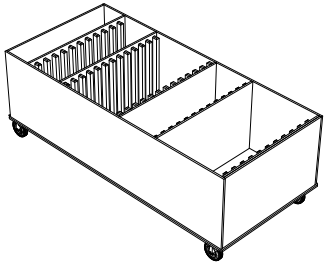

weight: 97 kg [empty] / 193 kg [full]

Item No.: 99159
Trolley for 3 x table-top-unit_STAGE_80_XS (maximum load)

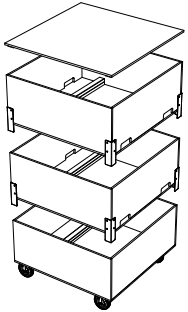

weight: 69 kg [empty]

STAGE_80_S | available table-top units

table-top_STAGE_80_XS
Item No.: 13006
table-top / glass, transparent or underside colored

table-top_STAGE_80_XS
Item No.: 14018
table-top / compact panel

table-top-unit_STAGE_80_XS_COOL
Item No.: 11010
metal bowl / steel, powder-coated
table-top / glass, underside colored

> more details see in chapter COOL

table-top-unit_STAGE_80_XS_ICE_WELL
Item No.: 11084
metal housing / steel, powder-coated
table-top / compact panel

> more details see in chapter COOL

table-top-unit_STAGE_80_XS_C+H
Item No.: 11014
table-top / compact panel
device-top: glass, white or black colored
metal parts: steel, powder-coated
only available for 230V

> more details see in chapter COOL

table-top-unit_STAGE_80_XS_BAIN-MARIE_C+H
Item No.: 11028
metal housing / steel, powder-coated
table-top / compact panel
only available for 230V

> more details see in chapter COOL

STAGE_80_S | available table-top units

table-top_unit_STAGE_80_XS_INDUCTION_VARIO_2
Item No.: 11164
metal parts: steel, powder-coated
table-top / compact panel
available for 110V and 230V

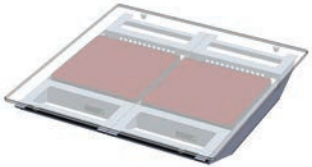

> more details see page INDUCTION_VARIO

table-top_unit_STAGE_80_XS_INDUCTION_VARIO_1
Item No.: 11165
metal parts: steel, powder-coated
table-top / compact panel
available for 110V and 230V

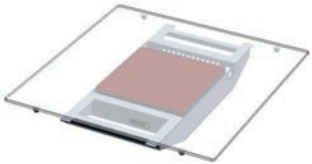

> more details see page INDUCTION_VARIO

table-frame_STAGE_80_ELEMENTS
Item No.: 20007199
metal frame / stainless steel (199)

> more details see chapter Modular Cooking System

table-top-unit_STAGE_80_XS_CHAFING-DISH_1
Item No.: 11057
table-top / compact panel

> more details see chapter CHAFING-DISH

table-top-unit_STAGE_80_XS_CHAFING-DISH_2
Item No.: 11054
table-top / compact panel

> more details see chapter CHAFING-DISH

STAGE_50_S | table system + available table-top units

Item No.: 51019
[LxWxH]: 1600 x 500 x 775 mm
total weight: 15,0 kg

Base
2 x main frame 9,0 kg
2 x table leg 6,0 kg
steel, powder-coated
profile 40 x 40 mm, with height compensation

4 x Castor
diameter = 65 mm
weight: 0,5 kg

Height adjustable:
775 mm (lowest height)
855, 935, 1015 mm

Table-top
compact laminate 10 mm,
weight: 5,6 kg

Alternative:

Table-top
safety glass 10 mm,
transparent or underside colored
weight: 9,5 kg

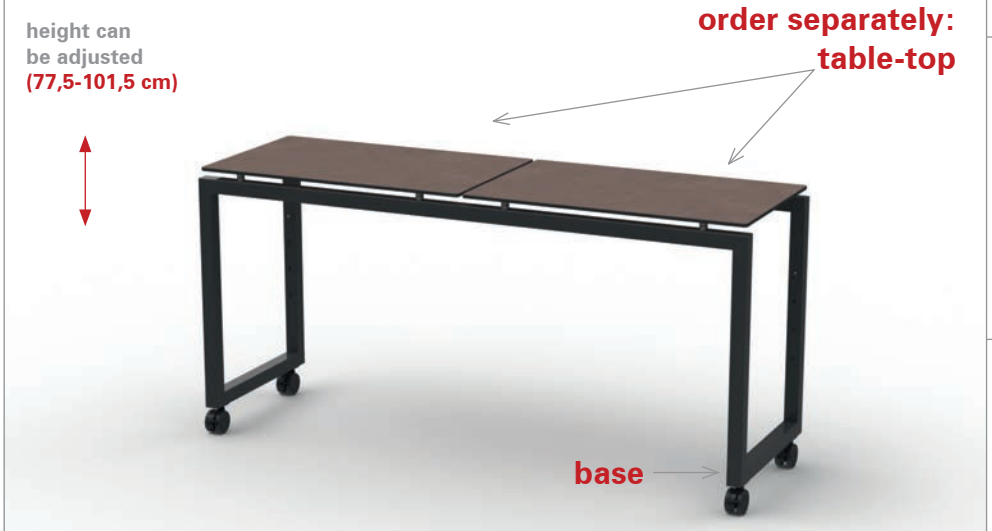

MATERIAL+COLOR

basic
base: 100, 101
table-top: 300, 465, 466

option
all available colors in chapter MATERIAL+COLOR

table-top_STAGE_50_XS
Item No.: 13029
table-top / glass, transparent or underside colored

table-top_STAGE_50_XS
Item No.: 14023
table-top / compact panel

table-top-unit_STAGE_50_XS_COOL
Item No.: 11041
table-top / glass, underside colored
metal bowl / steel, powder-coated

STAGE_50_S | available table-top units

table-top-unit_STAGE_50_XS_ICE_WELL
Item No.: 11085
metal housing / steel, powder-coated
table-top / compact panel

> more details see in chapter COOL

table-top-unit_STAGE_50_XS_CHAFING-DISH_1
Item No.: 11055
table-top / compact panel

> more details see chapter CHAFING-DISH

table-frame_COMPACT_STAGE_50_ELEMENTS
Item No.: 20020
metal frame / stainless steel (199)
table-top / compact panel

> more details see chapter Modular Cooking System

table-top-unit_STAGE_50_XS_BAIN-MARIE_C+H
Item No.: 11029100402
metal housing / steel, apowder-coated
table-top / compact panel
only available for 230V

> more details see in chapter COOL

Action Stations

Warm Buffet | Cold Buffet | Modular Cooking and Buffet System

INDUCTION_VARIO

flexible induction system | suitable for every STAGE table

Multi-Zone-Induction | manufacturer Gastros
A maximum of three pots can be used on an induction hob.

STAGE_80_M_INDUCTION_VARIO_4
Item No.: 81099

Multi-Zone-Induction Table

Free positioning of induction units

The new induction system VARIO for flexible and variable use of induction heat wherever you need it.
The system is available as single components or in a complete table.

A single metal housing with an induction unit inside can be placed under any STAGE_80 table (table-top). Depending on the length of the table, you can flexibly determine the position of the unit and the distance to the next unit.

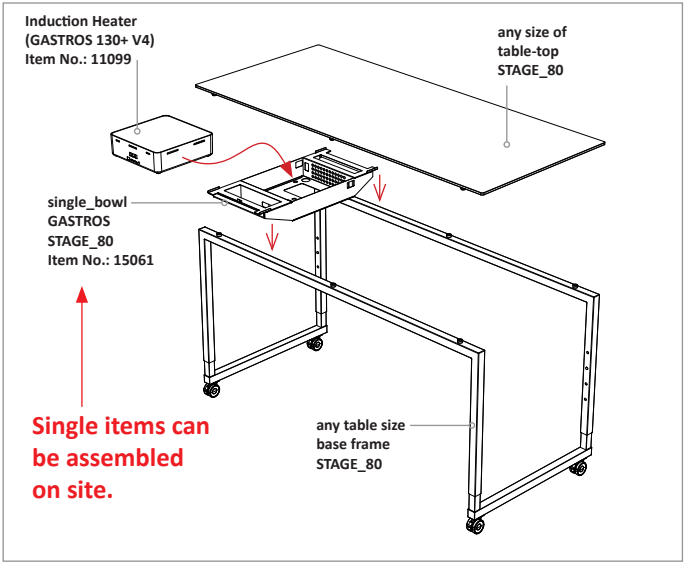

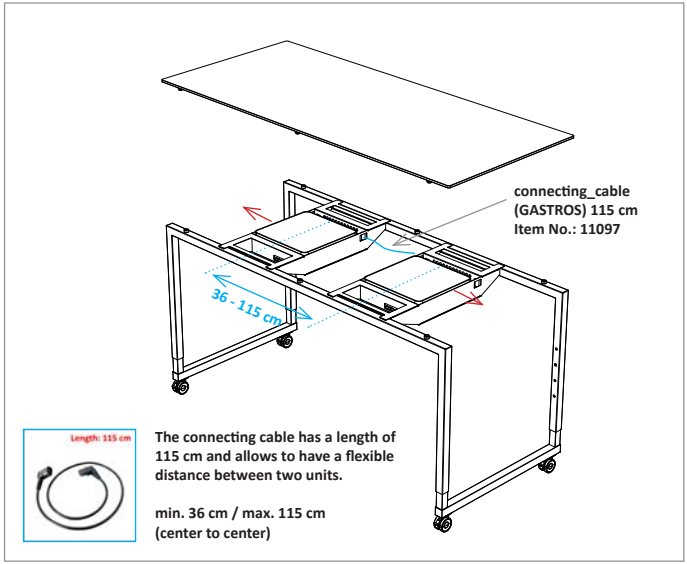

Multizone induction | field size 35 x 35 cm

There is no surface marking on the table top. You can determine the central position above the induction unit using the position markings on the metal housing.

The area around the central position is 350 x 350 mm and also allows you to place several pots above each induction (multi-zone unit).

To protect the table surface from overheating, please use the silicone mats.

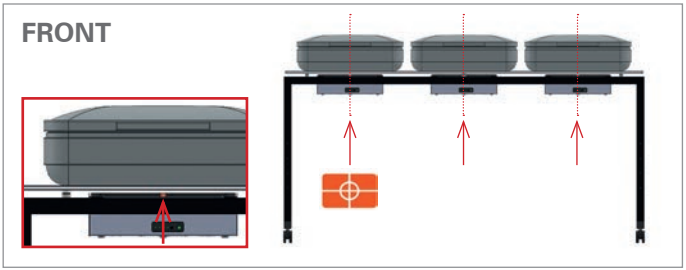

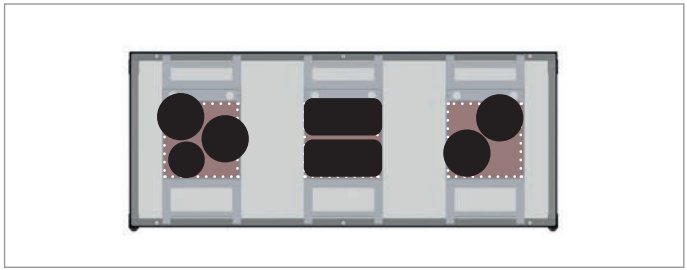

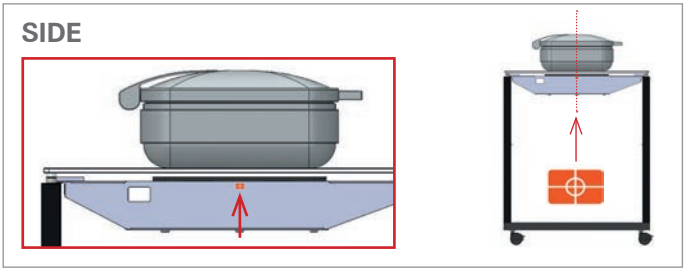

STAGE_80_L_INDUCTION_VARIO_4
Item No.: 81095

STAGE_80_L_INDUCTION_VARIO_3
Item No.: 81096

Table Size L (1960 x 800 x 935 mm)
table heights = 935, 1015, 1095, 1175 mm

available for 110V and 230V

STAGE_80_L_INDUCTION_VARIO_2
Item No.: 81097

STAGE_80_L_INDUCTION_VARIO_1
Item No.: 81098

STAGE_80_M_INDUCTION_VARIO_4
Item No.: 81099

STAGE_80_M_INDUCTION_VARIO_3
Item No.: 81100

Table Size M (1800 x 800 x 935 mm)
table heights = 855, 935, 1015, 1095 mm

available for 110V and 230V

STAGE_80_M_INDUCTION_VARIO_2
Item No.: 81101

STAGE_80_M_INDUCTION_VARIO_1
Item No.: 81102

STAGE_80_S_164_INDUCTION_VARIO_4
Item No.: 81103

STAGE_80_S_164_INDUCTION_VARIO_3
Item No.: 81104

Table Size S_164 (1640 x 800 x 935 mm)
table heights = 775, 855, 935, 1015 mm

available for 110V and 230V

STAGE_80_S_164_INDUCTION_VARIO_2
Item No.: 81105

STAGE_80_S_164_INDUCTION_VARIO_1
Item No.: 81106

STAGE_80_XS_INDUCTION_VARIO_2
Item No.: 81107

STAGE_80_XS_INDUCTION_VARIO_1
Item No.: 81108

Table Size XS (800 x 800 x 935 mm)
table heights =775, 855, 935, 1015 mm

available for 110V and 230V

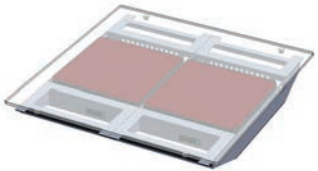

>>> suitable for STAGE_80_XS and S

table-top_unit_STAGE_80_XS_INDUCTION_VARIO_2
Item No.: 11164

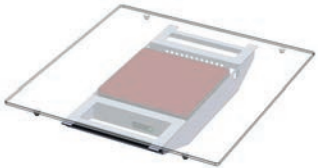

>>> suitable for STAGE_80_XS and S

table-top_unit_STAGE_80_XS_INDUCTION_VARIO_1
Item No.: 11165

INDUCTION_VARIO

flexible induction system | suitable for every STAGE table

Single-Point-Induction |manufacturer Adventys
Only one pot can be used at a time on an induction hob.

STAGE_80_M_INDUCTION_VARIO_3
Item No.: 81157

Single-Point-Induction Table

Free positioning of induction units

The new induction system VARIO for flexible and variable use of induction heat wherever you need it.
The system is available as single components or in a complete table.

Depending on the length of the table, you can flexibly determine the position of the unit and the distance to the next unit.

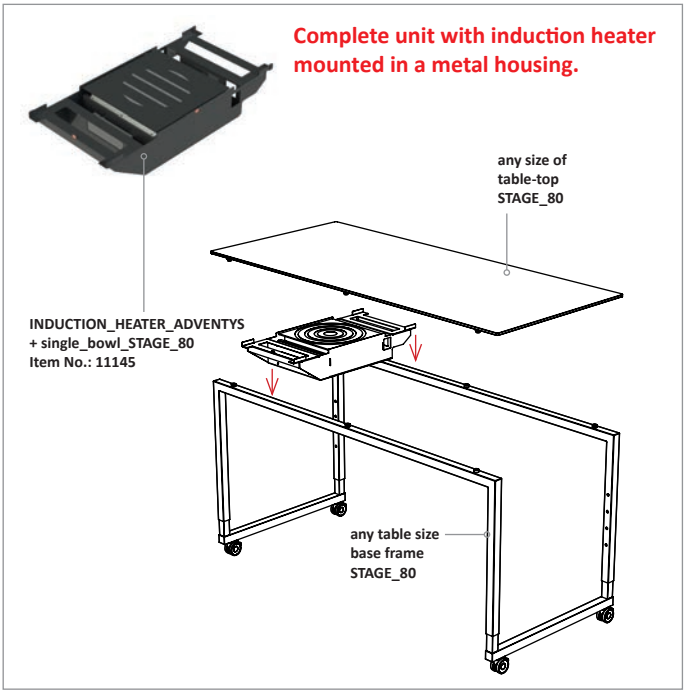

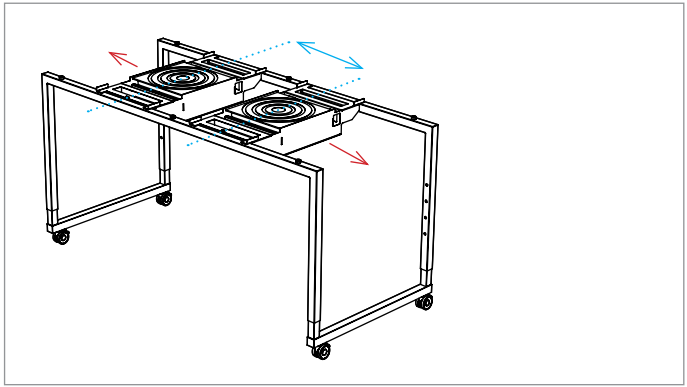

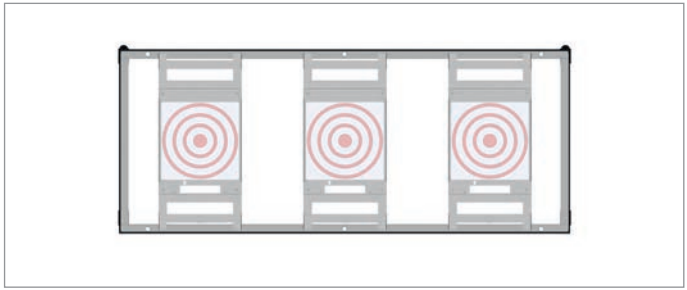

Single-Point-Induction | field size 35 x 35 cm

There is no surface marking on the table top. You can determine the central position above the induction unit using the position markings on the metal housing.

To prevent the table surface from overheating, please use the silicone mats provided. You will receive a set of mats in different sizes for each induction device. The mats will also prevent pots from being moved away from the induction area when food is being removed.

FRONT

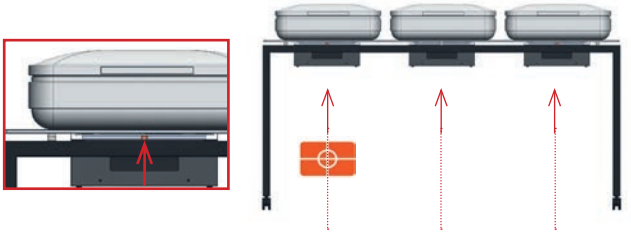

SIDE

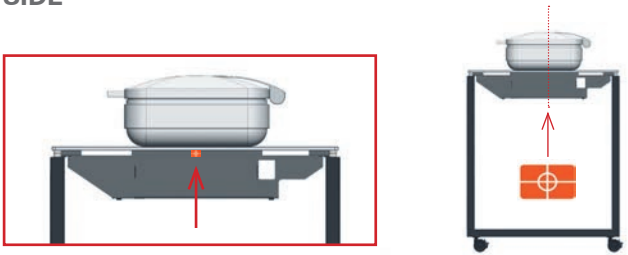

The active field of the induction unit measures 350 x 350 mm and can accommondate pots of various sizes. The pot must be magnetic and have a minimum diameter of 120 mm.

STAGE_80_L_INDUCTION_ADVENTYS_VARIO_4
Item No.: 81052

STAGE_80_L_INDUCTION_ADVENTYS_VARIO_3
Item No.: 81053

Table Size L (1960 x 800 x 935 mm)
table heights = 935, 1015, 1095, 1175 mm

available for 230V

STAGE_80_L
INDUCTION_ADVENTYS_VARIO_2
Item No.: 81054

STAGE_80_L
INDUCTION_ADVENTYS_VARIO_1
Item No.: 81055

STAGE_80_M_INDUCTION_ADVENTYS_VARIO_4
Item No.: 81056

STAGE_80_M_INDUCTION_ADVENTYS_VARIO_3
Item No.: 81157

Table Size M (1800 x 800 x 935 mm)
table heights = 855, 935, 1015, 1095 mm

available for 230V

STAGE_80_M
INDUCTION_ADVENTYS_VARIO_2
Item No.: 81158

STAGE_80_M
INDUCTION_ADVENTYS_ARIO_1
Item No.: 81159

STAGE_80_S_164_INDUCTION_ADVENTYS_VARIO_4
Item No.: 81160

STAGE_80_S_164_INDUCTION_ADVENTYS_VARIO_3
Item No.: 81161

Table Size S_164 (1640 x 800 x 935 mm)
table heights = 775, 855, 935, 1015 mm

available for 230V

STAGE_80_S_164
INDUCTION_ADVENTYS_VARIO_2
Item No.: 81162

STAGE_80_S_164
INDUCTION_ADVENTYS_VARIO_1
Item No.: 81163

STAGE_80_XS_INDUCTION_ADVENTYS_VARIO_2
Item No.: 81164

STAGE_80_XS_INDUCTION_ADVENTYS_VARIO_1
Item No.: 81165

Table Size XS (800 x 800 x 935 mm)
table heights =775, 855, 935, 1015 mm

available for 230V

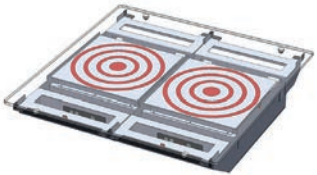

>>> suitable for STAGE_80_XS and S

table-top_unit_STAGE_80_XS_INDUCTION_ADVENTYS_VARIO_2
Item No.: 11143

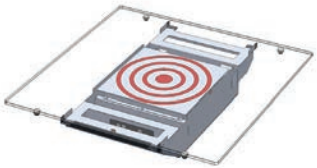

>>> suitable for STAGE_80_XS and S

table-top_unit_STAGE_80_XS_INDUCTION_ADVENTYS_VARIO_1
Item No.: 11144

Chafing-Dish

electrical heated chafing-dish integrated in a STAGE table

NEW
table with
integrated
CHAFING
DISH
VENTA

STAGE_80_M_CHAFING-DISH_4

Item No.: 81078
[LxWxH]: 1800 x 800 x 855 mm
weight: 56,3 kg

Base
2 x main frame 10,6 kg
2 x table leg 6,2 kg
steel, powder-coated
profile 40 x 40 mm, with height compensation

4 x Castor
diameter = 65 mm
weight: 0,5 kg

Height adjustable:
855 mm (lowest height)
935, 1015, 1095 mm

Table-Top
compact panel, 10 mm
weight: 36,3 kg

2 x Magnetic cable duct
[LxWxH]: 770 x 35 x 21 mm
weight: 0,965 kg
steel, 1 mm, bended, powder-coated

4 x Magnetic holder
[LxWxH]: 173 x 66 x 23 mm
weight: 0,186 kg
steel, 1 mm, bended, powder-coated

delivery content:
including 4 x inlay panel to close the openings, without chafing-dish

perfect system to present warm food in integrated chafing-dish

MATERIAL+COLOR

basic
base: 100, 101
table-top: 465, 466

option
all available colors in chapter MATERIAL+COLOR

combination of STAGE_80_M_CHAFING-DISH_4 and STAGE_80_XS_CHAFING-DISH_2 + BLINDS

top view

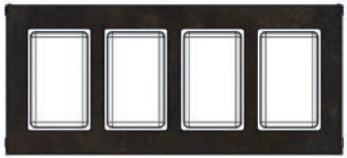

Item No.: 99144
Trolley for max. 2 x table 80_M_CHAFING-DISH

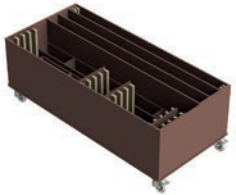

weight: 65 kg [empty] / 154 kg [full]

STAGE_80_XS_CHAFING-DISH_2

Item No.: 81080
[LxWxH]: 800 x 800 x 775 mm
weight: 33,6 kg

Base
2 x main frame 6,6 kg
2 x table leg 6,2 kg
steel, powder-coated
profile 40 x 40 mm, with height compensation

4 x Castor
diameter = 65 mm
weight: 0,5 kg

Height adjustable:
775 mm (lowest height)
855, 935, 1015 mm

Table-Top
compact panel, 10 mm,
decor: ceramic anthracite
weight: 18,0 kg

1 x Magnetic cable duct
[LxWxH]: 770 x 35 x 21 mm
weight: 0,965 kg
steel, 1 mm, bended, powder-coated

2 x Magnetic holder
[LxWxH]: 173 x 66 x 23 mm
weight: 0,186 kg
steel, 1 mm, bended, powder-coated

delivery content:
including 2 x inlay panel to close the openings, without chafing-dish

system suitable for chafing-dish units by WMF

MATERIAL+COLOR

basic
base: 100,101
table-top: 401, 402

option
all available colors in chapter MATERIAL+COLOR

combination of STAGE_80_M_CHAFING-DISH_4 and STAGE_80_XS_CHAFING-DISH_2

top view

Item No.: 99145
trolley for max. 2 x table 80_XS_CHAFING-DISH

weight: 50 kg [empty] / 104 kg [full]

STAGE_80_M_CHAFING-DISH_3

Item No.: 81079
[LxWxH]: 1800 x 800 x 855 mm
weight: 56,1 kg

Base
2 x main frame 10,6 kg
2 x table leg 6,2 kg
steel, powder-coated
profile 40 x 40 mm, with height compensation

4 x Castor
diameter = 65 mm
weight: 0,5 kg

Height adjustable:
855 mm (lowest height)
935, 1015, 1095 mm

Table-Top
compact panel, 10 mm
weight: 36,3 kg

2 x Magnetic cable duct
[LxWxH]: 770 x 35 x 21 mm
weight: 0,965 kg
steel, 1 mm, bended, powder-coated

3 x Magnetic holder
[LxWxH]: 173 x 66 x 23 mm
weight: 0,186 kg
steel, 1 mm, bended, powder-coated

delivery content:
including 3 x inlay panel to close the openings, without chafing-dish

perfect system to present warm food in integrated chafing-dish

MATERIAL+COLOR

basic
base: 100, 101
table-top: 465, 466

option
all available colors in chapter MATERIAL+COLOR

STAGE_80_M_CHAFING-DISH_3 + BLINDS

top view

Item No.: 99144
Trolley for max. 2 x table 80_M_CHAFING-DISH

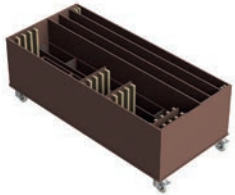

weight: 65 kg [empty] / 157 kg [full]

STAGE_80_XS_CHAFING-DISH_1

Item No.: 81081
[LxWxH]: 800 x 800 x 775 mm
weight: 32,5 kg

Base
2 x main frame 6,6 kg
2 x table leg 6,2 kg
steel, powder-coated
profile 40 x 40 mm, with height compensation

4 x Castor
diameter = 65 mm
weight: 0,5 kg

Height adjustable:
775 mm (lowest height)
855, 935, 1015 mm

Table-Top
compact panel, 10 mm
weight: 18,0 kg

1 x Magnetic cable duct
[LxWxH]: 770 x 35 x 21 mm
weight: 0,965 kg
steel, 1 mm, bended, powder-coated

1 x Magnetic holder
[LxWxH]: 173 x 66 x 23 mm
weight: 0,186 kg
steel, 1 mm, bended, powder-coated

delivery content:
including 1 x inlay panel to close the opening, without chafing-dish

system suitable for chafing-dish units by WMF

MATERIAL+COLOR

basic
base: 100,101
table-top: 465, 466

option
all available colors in chapter MATERIAL+COLOR

combination of STAGE_80_M_CHAFING-DISH_3 and STAGE_80_XS_CHAFING-DISH_1

top view

Item No.: 99145
Trolley for max. 2 x table 80_XS_CHAFING-DISH

weight: 50 kg [empty] / 104 kg [full]

STAGE_50_M_CHAFING-DISH_2

Item No.: 51042
[LxWxH]: 1800 x 500 x 855 mm
weight: 39,4 kg

Base
2 x main frame 10,6 kg
2 x table leg 5,0 kg
steel, powder-coated
profile 40 x 40 mm, with height compensation

4 x Castor
diameter = 65 mm
weight: 0,5 kg

Height adjustable:
855 mm (lowest height)
935, 1015, 1095 mm

Table-Top
compact panel, 10 mm
weight: 21,0 kg

1 x Magnetic cable duct
[LxWxH]: 770 x 35 x 21 mm
weight: 0,965 kg
steel, 1 mm, bended, powder-coated

2 x Magnetic holder
[LxWxH]: 173 x 66 x 23 mm
weight: 0,186 kg
steel, 1 mm, bended, powder-coated

delivery content:
including 2 x inlay panel to close the openings, without chafing-dish

perfect system to present warm food in integrated chafing-dish

MATERIAL+COLOR

basic
base: 100, 101
table-top: 465, 466

option
all available colors in chapter MATERIAL+COLOR

combination of STAGE_50_M_CHAFING-DISH_2 and STAGE_50_XS_CHAFING-DISH_1 + SHELF

top view

Item No.: 99144
Trolley for max. 2 x table 50_M_CHAFING-DISH

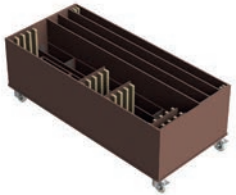

weight: 65 kg [empty] / 154 kg [full]

STAGE_50_XS_CHAFING-DISH_1

Item No.: 51043
[LxWxH]: 800 x 500 x 775 mm
weight: 26 kg

Base
2 x main frame 6,6 kg
2 x table leg 5,0 kg
steel, powder-coated
profile 40 x 40 mm, with height compensation

4 x Castor
diameter = 65 mm
weight: 0,5 kg

Height adjustable:
775 mm (lowest height)
855, 935, 1015 mm

Table-Top
compact panel, 10 mm
weight: 12,7 kg

1 x Magnetic cable duct
[LxWxH]: 770 x 35 x 21 mm
weight: 0,965 kg
steel, 1 mm, bended, powder-coated

1 x Magnetic holder
[LxWxH]: 173 x 66 x 23 mm
weight: 0,186 kg
steel, 1 mm, bended, powder-coated

delivery content:
including 1 x inlay panel to close the opening, without chafing-dish

system suitable for chafing-dish units by WMF

MATERIAL+COLOR

basic
base: 100,101
table-top: 465, 466

option
all available colors in chapter MATERIAL+COLOR

combination of STAGE_50_M_CHAFING-DISH_2 and STAGE_50_XS_CHAFING-DISH_1

top view

Item No.: 99145
Trolley for max. 2 x table 50_XS_CHAFING-DISH

weight: 50 kg [empty] / 124 kg [full]

STAGE – CHAFING-DISH System

simple, functional, easy to handle

Buffet tables with openings to install CHAFING-DISH units, which are fully integrated in the table surface. VENTA recommends to use SPRING as we designed a special magnetic holder to place the remote control direct under the table.

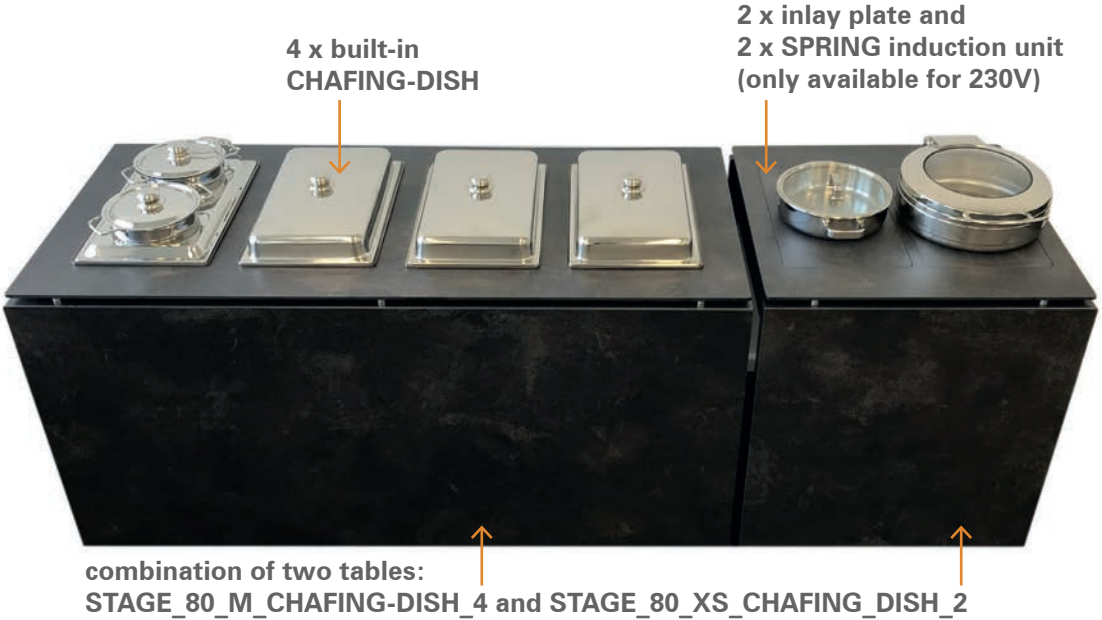

CHAFING-DISH – additional equipment

SPRING heating unit with 230V.

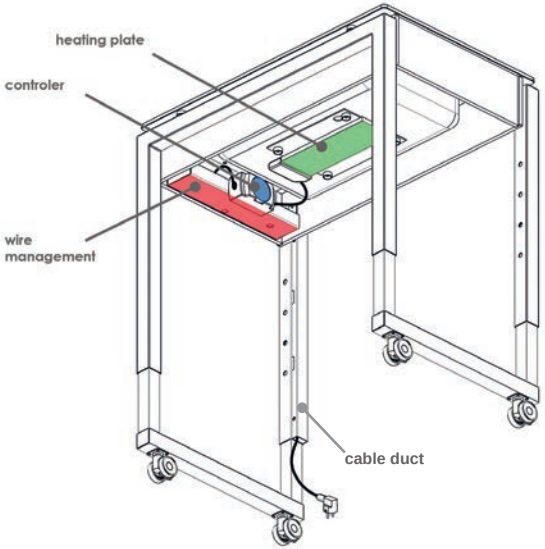

built-in chafing-dish ECO_SPRING

Item No.: 12300

electric heating unit SPRING

Item No.: 12301

SPRING induction unit 1000W round

Item No.: 12303

inlay_plate_induction_STA-GE_CHAFING-DISH

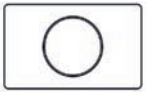

Item No.: 14063

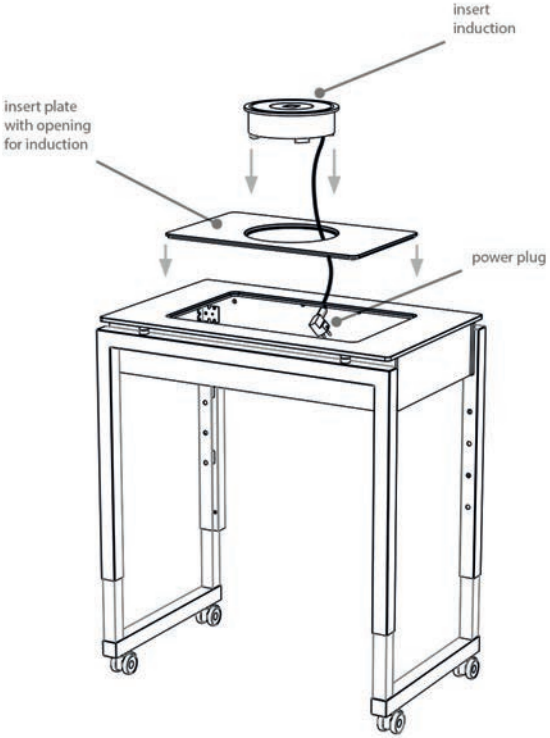

Cold Buffet

cooling with electrical devices

Item No.: 81063

BAIN-MARIE

The buffet table STAGE_80_XS_BAIN-MARIE_COOL+HOT is a stainless steel basin of size 2/1 GN which contains a COOL+HOT unit.

This technology was developed by Höller, one of a small number of companies worldwide who offer this technology in small and convenient units. This cold-hot plate enables you to keep dishes cool at temperatures as low as -5°C or to switch on the heating function. A hot plate keeps dishes warm. This has the added benefit that you do not have to use induction-compatible cookware, but can also use porcelain cookware, for example.

The buffet table has an area of 80 x 80 cm, while the integrated hob measures GN 2/1 (i.e. 66 x 53 cm). Power is supplied via a standard power cable (230 V). Heavy current is not required.

The equipment runs very quietly and energy-efficiently.

Item No.: 81063 (different types of use)

STAGE_80_XS_BAIN-MARIE_COOL+HOT

Item No.: 81063
[LxWxH]: 800 x 800 x 775 mm
(adj. height: 855, 935, 1015 mm)
weight: 71,6 kg

Base
steel, powder-coated
profile 40 x 40 mm, on wheels
with height compensation,
weight: 13,6 kg

Table-Top
compact panel,790 x 790 x 10 mm
weight: 3,9 kg

Inlay
compact panel, 10 mm
weight: 2,6 kg (each inlay)

COOL+HOT-unit
size: 2/1 GN (660 x 530 mm)
stainlees steel (inside)
metal housing (outside)
powder-coated
weight: 48,9 kg

COOL or HOT
combined in one table

The HOT-mode keeps the food warm. **No cooking !**

suitable for 2/1 GN
size: 650 x 507 mm
depth: 105 mm

-5°C / +140°C
temperature range
at ambient temperature of 24°C

only available for 230V

height can be adjusted
(76 - 100 cm)

MATERIAL+COLOR

basic
base: 100,101
table-top: 465, 466

option
all available colors in chapter
MATERIAL+COLOR

delivery content:
including 2 x inlay panel
to close the opening

multifunctional well Hot-Cold (2/1 GN)
measures: 770 x 630 x 250 mm

features: multifunctional well Hot-Cold with two inlays, Bain-Marie: adjustable from 30°C up to 110°C/static cooling: up to -5°C, max. ambient temperature 25°C, CW unit: GN 2/1, 230V, heat output: 1800 Watt, coolant: R600a, cooling output: 140 Watt

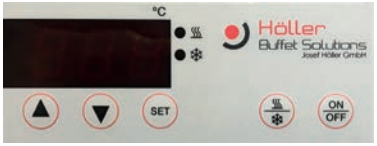

STAGE_50_XS_BAIN-MARIE_COOL+HOT

STAGE_50_XS_BAIN-MARIE_COOL+HOT
Item No.: 51025
[LxWxH]: 800 x 500 x 775 mm
(ad. height: 855, 935, 1015 mm)
weight: 52,6 kg

Base
steel, powder-coated
profile 40 x 40 mm, on castors
with height compensation
weight: 12,6 kg

Table-Top
compact panel,790 x 490 x 10 mm
weight: 3,0 kg

Inlay
compact panel, 10 mm
weight: 1,3 kg (each inlay)

COOL+HOT-unit
size: 1/1 GN (530 x 325 mm)
stainlees steel (inside)
metal housing (outside)
powder-coated
weight: 34,4 kg

COOL or HOT
combined in one table

The HOT-mode keeps the food warm. **No cooking !**

suitable for 1/1 GN
size:507 x 303 mm
depth: 105 mm

-5°C / +140°C
temperature range
at ambient temperature of 24°C

only available for 230V

height can be adjusted
(76 - 100 cm)

MATERIAL+COLOR

basic	option
base: 100, 101 table-top: 465, 466	all available colors in chapter MATERIAL+COLOR

delivery content:
including 2 x inlay panel
to close the opening

multifunctional well Hot-Cold (1/1 GN)
measures: 425 x 630 mm

explosion view /
single parts

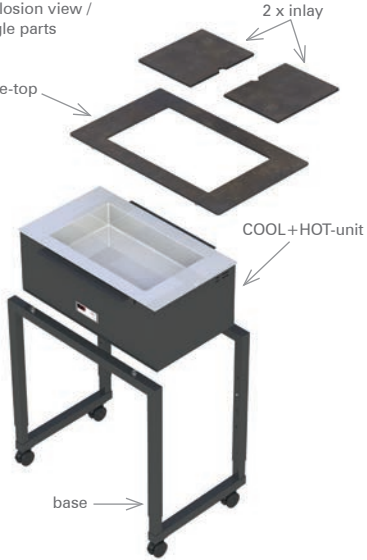

Item No.: 81006

COOL+HOT table

Another technical gem is our STAGE_80_XS_COOL+HOT buffet table with a glass surface, which houses a cold-hot plate.

This technology was developed by Höller, one of a small number of companies worldwide who offer this technology in small and convenient units. This cold-hot plate enables you to keep dishes cool at temperatures as low as -5°C or to switch on the heating function. A hot plate keeps dishes warm. This has the added benefit that you do not have to use induction-compatible cookware, but can also use porcelain cookware, for example.

The buffet table has an area of 80 x 80 cm, while the integrated hob measures GN 2/1 (i.e. 66 x 53 cm). Power is supplied via a standard power cable (230 V).
Heavy current is not required.

The equipment runs very quietly and energy-efficiently.

STAGE_80_XS_COOL+HOT

Item No.: 81006
[LxWxH]: 800 x 800 x 775 mm
(ad. height: 855, 935, 1015 mm)
weight: 60 kg

Base
steel, powder-coated
profile 40 x 40 mm, on wheels
with height compensation,
weight: 13,6 kg

Table-Top
compact plate 10 mm, 790 x 790 mm
weight: 4 kg

Cover
metal box, 1,5 mm,
powder-coated
weight: 12 kg

COOL+HOT-unit
size: 2/1 GN (660 x 530 mm)
glass-top, black colored (307)
or white colored (303)
weight: 26 kg

COOL or HOT
combined in one table

>>> ONLY available as STAGE_80_XS table.

connection between table-top and base

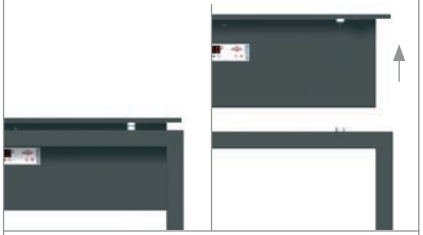

only available for 230V

height can be adjusted (76 - 100 cm)

explosion view/main parts

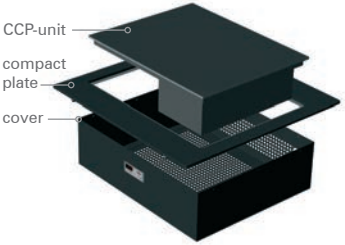

dismantling the cover for service

MATERIAL+COLOR

basic
base: 100,101
table-top: 465, 466

option
all available colors in chapter MATERIAL+COLOR

Benefits

-3°C / +120°C
temperature range

The HOT-mode keeps the food warm, **no cooking!**

SIZE: 2/1 GN
660 x 530 mm

maximum load: 80 kg

table on castors

CCP (comfort-combi-plate) 2/1 GN
measures: 660 x 530 mm

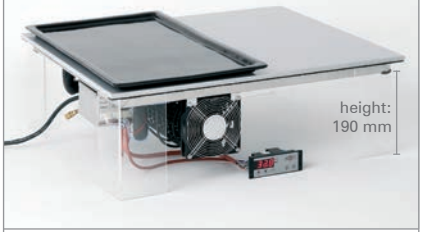

technical details:
CCP built-in system, 2/1 GN, size: 660 x 530 mm, height: 190 mm, power supply: 230V, heat output: 1400W, coolant: R600a, cooling output: 140W

touch panel on the front of the table

Cold Buffet

cooling with ice cubes and cooling plates

Item No.: 81007

COOL table

Our exclusive STAGE_80_XS_COOL table with integrated cold plates works without the need for any power cables.

You place this table anywhere in the room – no need for power sockets.

Before use, the cold plates must be stored in the freezer room of the hotel or event location for around twelve hours at -18°C. Then the COOL table can be used for approximately five hours.

The temperature of the table surface is approx. 5°C. The table is designed for indoor use with an ambient temperature of approx. 21°C.

Use at higher temperatures is not recommended, as the result will not be satisfactory.

Do not install a sneezeguard on this table, as the table-top should be free to exchange the COOL_PLATES.

STAGE_80_XS_COOL

Item No.: 81007
[LxWxH]: 800 x 800 x 775 mm
weight: 48,6 kg

Base
2 x main frame 6,6 kg
2 x table leg 6,2 kg
steel, powder-coated
profile 40 x 40 mm, with height compensation

Bowl_80_XS_COOL
metal, powder-coated
weight: 8,3 kg

Table-top
safety glass 10 mm, 790 x 790 mm,
underside black colored,
weight: 15 kg

COOL_PLATE (4x)
350 x 350 x 26 mm
polystryrene, color: black
weight: 2,4 kg

4 x Castor
diameter = 65 mm
weight: 0,5 kg

5h cooling 5°-10°C

on the table surface without electricity

Preparation:
Place the COOL-PLATE for 12 hours inside a freezer at -18°C in vertical position.

works only with glass surface

height can be adjusted (77,5 - 100,5 cm)

MATERIAL+COLOR

basic
base: 100, 101
table-top: 303, 307

option
all available colors in chapter MATERIAL+COLOR

Item No.: 66003 / COOL_PLATE

explosion view

STAGE_50_XS_COOL

Item No.: 51029
[LxWxH]: 800 x 500 x 775 mm
weight: 31,4 kg

Base
2 x main frame 6,6 kg
2 x table leg 5,0 kg
steel, powder-coated
profile 40 x 40 mm, with height compensation

Bowl_50_XS_COOL
metal, powder-coated
weight: 5,0 kg

Table-top
safety glass 10 mm, 790 x 490 mm,
underside black colored,
weight: 9,5 kg

COOL_PLATE (2x)
350 x 350 x 26 mm
polystryrene, color: black
weight: 2,4 kg

4 x Castor
diameter = 65 mm
weight: 0,5 kg

5h cooling 5°-10°C

on the table surface without electricity

Preparation:
Place the COOL_PLATE for 12 hours inside a freezer at -18°C in vertical position.

works only with glass surface

height can be adjusted (77,5 - 100,5 cm)

MATERIAL+COLOR

basic
base: 100,101
table-top: 303, 307

option
all available colors in chapter MATERIAL+COLOR

Item No.: 99129 / Trolley_COOL_PLATES_8

Item No.: 99132 / Trolley_COOL_PLATES_4B

weight: 62,3 kg [empty] / 139,1 kg [full]

Item No.: 81092101401

STAGE_80_XS_ICE_WELL

The ICE WELL with a depth of 20 cm is designed for cooling bottles. The entire well is filled with ice cubes. The well is equipped with a drainage tap and thus offers the possibility to drain the entire contents (melted ice = water) after use. A bucket can be placed under the table when the shut-off valve gets opened. In addition, a 1/1 GN grid basket can be used in the ice well. In this way the not yet melted ice can be easily removed. The ice well is available in two sizes (80 x 80 cm and 50 x 80 cm) for a buffet depth of 80 cm. The tub can be closed with the supplied insert plates (two pieces each) so that the table-top can be used as a shelf.

Useful Equipment

The perforated 1/1 GN container helps to remove the ice cubes out of the ICE WELL.

Drain Tap

Item No.: 81092100414

STAGE_80_XS_ICE_WELL

Item No.: 81092
[LxWxH]: 800 x 800 x 775 mm
weight: 47,3 kg

Base
2 x main frame 6,6 kg
2 x table leg 6,2 kg
steel, powder-coated
profile 40 x 40 mm, with height compensation

4 x Castor
diameter = 65 mm
weight: 0,5 kg

Height adjustable / grid = 80 mm
775 mm (lowest height)
855, 935, 1015 mm

Table-top
compact laminate 10 mm
weight: 4,2 kg

Housing_80_XS_ICE_WELL
metal, powder-coated
weight: 22,2 kg

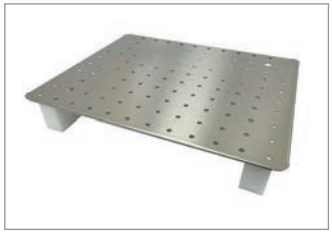

inlay for reducing the ice well depth, 2/1 GN, three heights (50, 100, 150 mm) adjustable by using the distance block in different positions

table opening closed with lid

explosion view

height can be adjusted (77,5 - 101,5 cm)

MATERIAL+COLOR

basic
base: 100, 101
table-top: 465, 466

option
all available colors in chapter MATERIAL+COLOR

delivery content:
including 2 x inlay panel to close the opening

STAGE_50_XS_ICE_WELL

Item No.: 51049
[LxWxH]: 800 x 500 x 775 mm
weight: 35,0 kg

Base
2 x main frame 6,6 kg
2 x table leg 5,0 kg
steel, powder-coated
profile 40 x 40 mm, with height compensation

4 x Castor
diameter = 65 mm
weight: 0,5 kg

Height adjustable:
775 mm (lowest height)
855, 935, 1015 mm

Table-top
compact laminate 10 mm
weight: 3,3 kg

Housing_50_XS_ICE_WELL
metal, powder-coated
weight: 14,1 kg

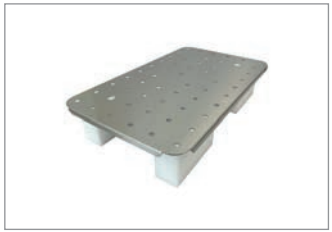

inlay for reducing the ice well depth, 1/1 GN, three heights (50, 100, 150 mm) adjustable by using the distance block in different positions

table opening closed with lid

explosion view

height can be adjusted (77,5 - 101,5 cm)

MATERIAL+COLOR

basic
base: 100,101
table-top: 465, 466

option
all available colors in chapter MATERIAL+COLOR

delivery content:
including 2 x inlay panel to close the opening

ACRYLIC_DISPLAY_HOOD_2_1_GN

Item No.: 66108
[LxWxH]: 690 x 560 x 350 mm
weight: 12 kg

Base
material: acrylic glass,
10 mm, transparent,
8 x feet for a non-slip stand on the table surface

MATERIAL+COLOR

basic	**option**
plastic part: 500	no color options available

mounted on STAGE_80_XS_ICE_WELL (81092)

mounted on STAGE_80_XS_COOL+HOT (81006)

ACRYLIC_ICE_DISPLAY_2_1_GN

Item No.: 66109
[LxWxH]: 760 x 640 x 210 mm
weight: 6,1 kg

Base
material: acrylic glass, 10 mm,
transparent

MATERIAL+COLOR

basic	**option**
plastic part: 500	no color options available

mounted on STAGE_80_XS_ICE_WELL (81092)

mounted on STAGE_80_XS_BAIN-MARIE_C+H (81063)

ELEMENTS

modular cooking and buffet system | AIRMOBIL – mobile exhaust

only available for 230V

ELEMENTS®

ELEMENTS®

Modular Cooking System

The latest addition to our buffet tables now concerns live cooking/front cooking, the experience of cooking and serving in front of the guests, so that every event becomes a highlight. The top priority in the development was that VENTA customers can use their already purchased tables for the live cooking stations. Furthermore, the flexibility and mobility of the familiar systems was to be increased. True to the motto “everybody can be bigger” we chose the smallest of the four buffet tables from our Stage Buffet System as the output of the latest development. The smallest square buffet table STAGE 80 XS with the dimensions 80 x 80 cm, which is available twice in a STAGE 80 buffet set, was thus the basis for the new VENTA Elements, our modular system for modern and contemporary live cooking / front cooking, which meets all the requirements of the most varied F & B concepts in countries all over the world.
Instead of the glass or compact table-top, a square ELEMENTS table frame made of stainless steel is now placed on the existing table frame. The square dimension has the advantage that the table frame can be used both lengthwise and crosswise, so that all available thermal equipment and inserts can be inserted into the Elements table frame not only lengthwise but also crosswise and can be used in different ways in daily use. In order to be able to use our Elements live cooking system/front cooking system indoors, a mobile extraction unit had to be developed and designed especially for table size XS, which fully meets today’s requirements for odourless cooking in closed rooms. With its external dimensions of 80 x 30 cm, our Airmobil can be placed precisely (tailor-made) to the right, left or in front of a STAGE 80 XS ELEMENTS live cooking table and can thus be adapted to the daily changing requirements in the areas of construction and concept of a flexible and modular live cooking station.

homepage: https://ventadesign.com/elements-live-cooking-system/#

catalogue: https://ventadesign.com/info/ventadesign-elements-presentation.pdf

ELEMENTS®

STAGE_80_S_ELEMENTS_4

Item No.: 20101
[LxWxH]: 1600 x 800 x 935 mm
total weight: 31,1 kg

Base
2 x main frame 9,0 kg (15803)
2 x table leg 6,2 kg (15805)
steel, powder-coated
profile 40 x 40 mm, with height compensation

2 x Table frame ELEMENTS (20007)
[LxWxH]: 800 x 800 x 66 mm
total weight: 2 x 7,7 kg

4 x Castor (11716)
diameter = 65 mm
weight: 0,5 kg

Item No.: 11765
magnetic_cable_duct_770mm
[LxWxH]: 770 x 35 x 21 mm
weight: 1,0 kg
material: steel, 1 mm, bended, powder-coated

Height adjustable:
775 mm (lowest height)
855, 935, 1015 mm

exploded view / all individual parts

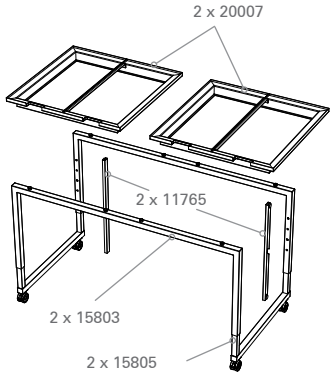

MATERIAL+COLOR

basic
base: 100, 101
metal parts: 199
table-top: 465, 466

option
all available colors in chapter MATERIAL+COLOR

Item No.: 99149
Trolley for 2 x STAGE_80_S_ELEMENTS_4 + additional equipment (maximum load)

weight: 165 kg [empty] / 227,2 kg [full]

STAGE_80_S_ELEMENTS_2

Item No.: 20102
[LxWxH]: 1600 x 800 x 935 mm
total weight: 32,2 kg

Base
2 x main frame 9,0 kg (VE-15803)
2 x table leg 6,2 kg (VE-15805)
steel, powder-coated
profile 40 x 40 mm, with height compensation

Table frame ELEMENTS (20007)
[LxWxH]: 800 x 800 x 66 mm
total weight: 7,7 kg

4 x Castor (11716)
diameter = 65 mm
weight: 0,5 kg

Table-top (14018)
compact laminate 10 mm,
ceramic anthracite (402)
weight: 8,8 kg

Item No.: 11765
2 x magnetic_cable_duct_770mm
[LxWxH]: 770 x 35 x 21 mm
weight: 2 x 1,0 kg
material: steel, 1 mm, bended, powder-coated anthracite (100)

exploded view / all individual parts

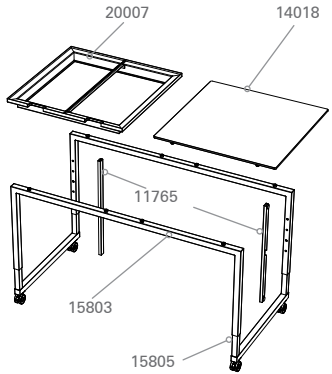

height can be adjusted **(77,5-101,5 cm)**

2 x compartments can be filled with an individual selection of items, e.g. NEMCO COOK induction or insert plates

MATERIAL+COLOR

basic
base: 100, 101
metal parts: 199
table-top: 465, 466

option
all available colors in chapter MATERIAL+COLOR

Item No.: 99149
Trolley for 2 x STAGE_80_S_ELEMENTS_2 + additional equipment (maximum load)

weight: 165 kg [empty] / 227,2 kg [full]

INDUCTION_COOK_ELEMENTS
Item No.: 20009

TEPPAN_GRILL_ELEMENTS
Item No.: 20010

PASTA_SET
Item No.: 20022

FRYING_SET
Item No.: 20023

only available for 230V

CHAFING_DISH_SET
Item No.: 20028

SOUP_SET
Item No.: 20026

DIM_SUM_SET
Item No.: 20034

COMPACT_TOP_ELEMENTS
Item No.: 20012 (20029)

STAINLESS_TOP_ELEMENTS
Item No.: 20013

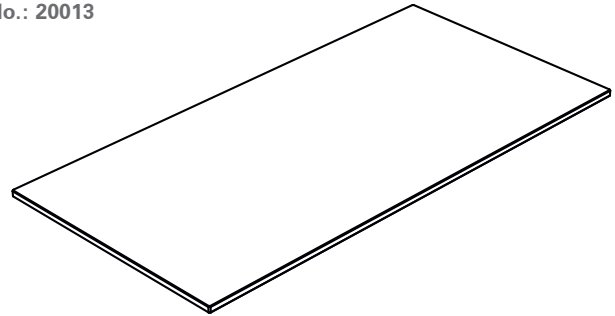

only available for 230V

1_1_GN_ingredients_container
Item No.: 12353

COMPACT_TOP_ELEMENTS_ICE_WELL

Item No.: 20040/20041
including 1 x inlay panel
to close the ice well

GN_1_1_perforated
Item No.: 12309

ICE_WELL
Item No.: 20017

CARVING_SET
Item No.: 20024

only available for 230V

only available for 230V

AIRMOBIL_80
Item No.: 66039

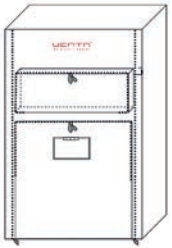

PROTECTIVE COVER AIRMOBIL_80
Item No.: 78011

TROLLEY AIRMOBIL_80
Item No.: 99148

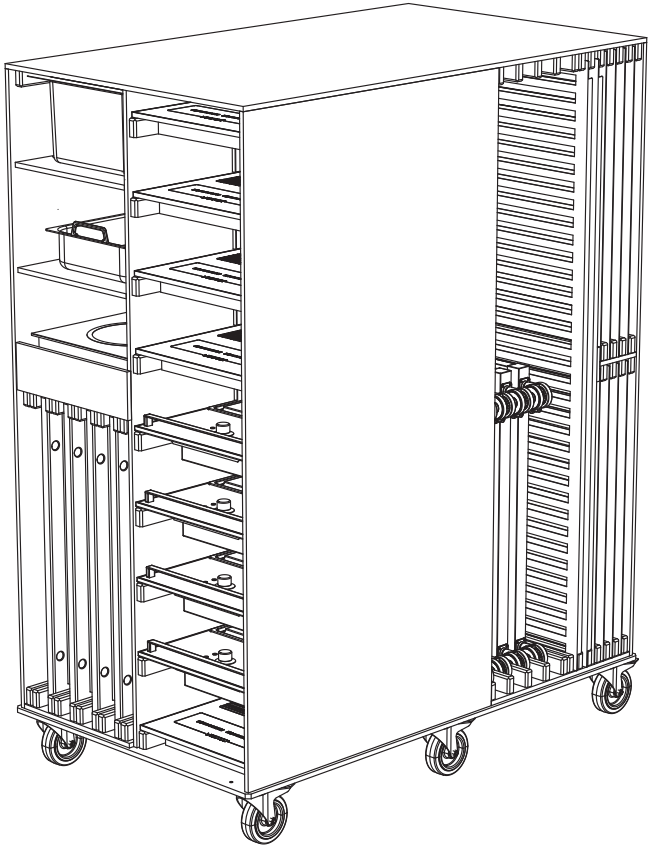

TROLLEY_STAGE_ELEMENTS
Item No.: 99149

alternative equipment for usage on INDUCTION_COOK unit

WOK
Item No.: 12339

more flexibility with flat bottom wok

WOK
Item No.: 12340

more flexibility with flat bottom wok

GRILL PLATE
Item No.: 12316

alternative product to teppan grill unit

plugbar_
CEE_400V_3x16A_3600W
Item No.: 11162

plugbar_
UK_230V_13A_3200W
Item No.: 11163

also available as single items:
table frame_STAGE_80_ELEMENTS
Item No.: 20007

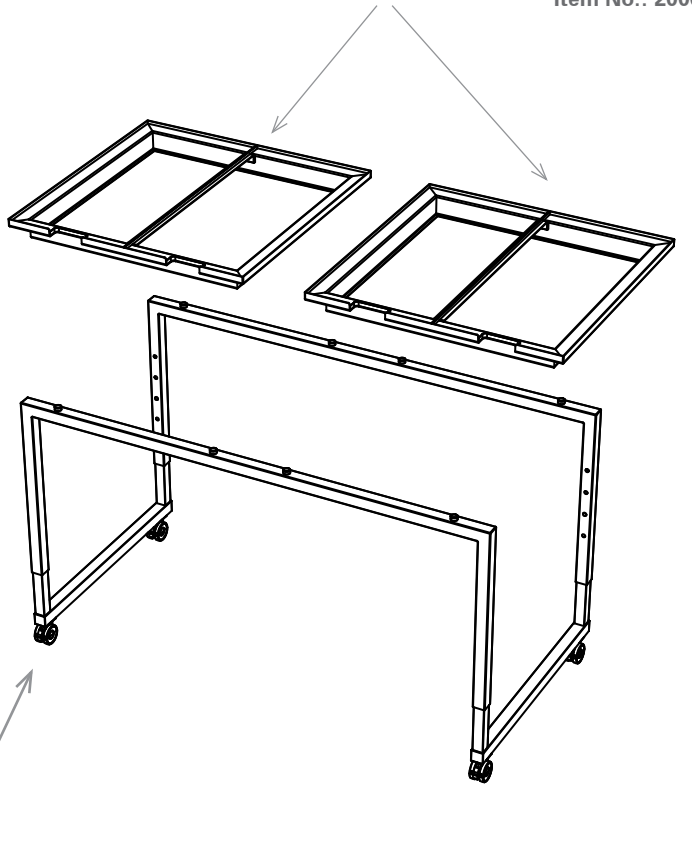

STAGE_80_S_ELEMENTS
Item No.: 20101

ELEMENTS - Chefs Table

AIRMOBIL / alternative position

It is also possible to place the AIRMOBIL on the side of the STAGE ELEMENTS TABLE in order to have more space at the front of the table. To do this, you must rotate the frame of the ELEMENTS TABLE by 90°.

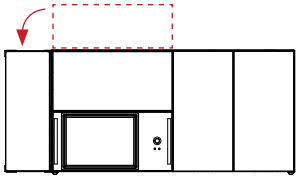

ELEMENTS

additional equipment

Rieber - termoport
(item-no.: 8500412)

Rieber - undercarriage
(item-no.: 88140106)

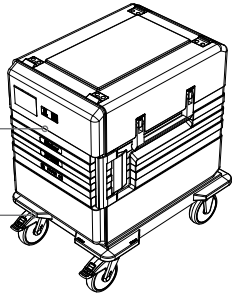

ELEMENTS

Important advices to select the correct equipment.

We recommend to mount always BLINDS on every ELEMENTS station (S and XS) to hide the installed equipment, the cables and any additional cooking utensils.

The CARVING STATION can only be equipped at the FRONT with compact laminate blinds. The decorative metal blinds will not fit at the front, as the mounted shield and the heat lamp do not allow the correct mounting.

The same situation is valid for an additional, separate mounting of a STAY HOT heat lamp at the front of a S or XS table.

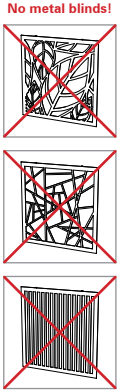

ELEMENTS

Power Management

We recommend to discuss with us the electrical situation in your property and to create a plan for power cable management.
This will help you to select all necessary cables and power strips according to your local situation.

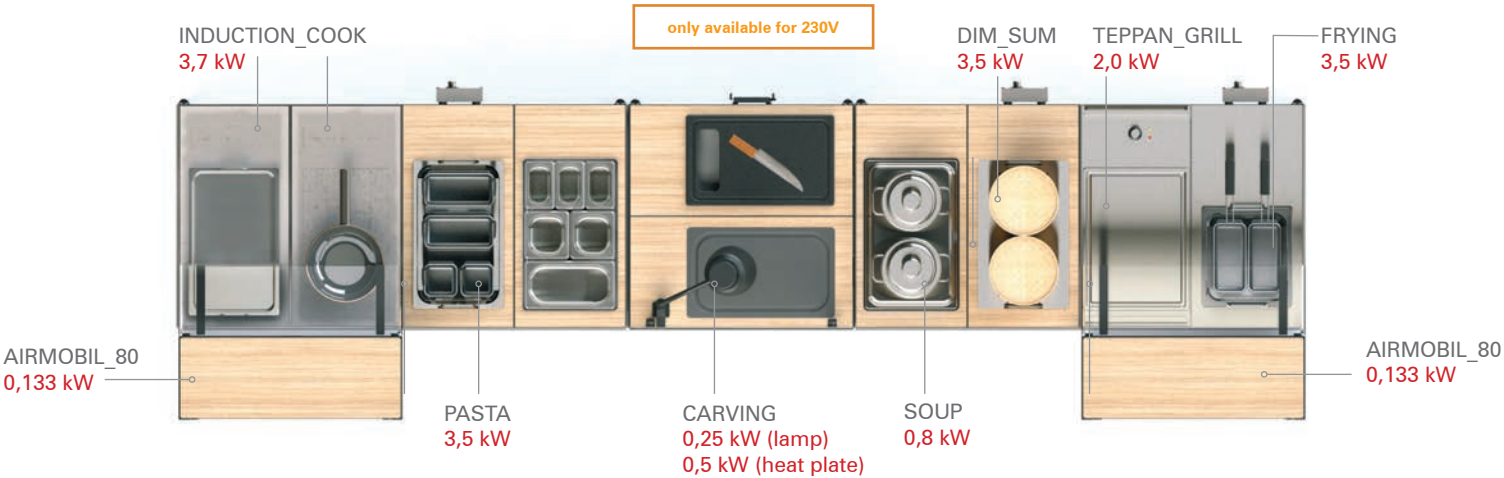

VENTA recommendation = 2 x plugbar 400V + 1 x plugbar 230V / alternative solution = 1 x plugbar 230V + 7 x extension cable 5m (use on individually fused 16A sockets)

Buffet Accessories

Blind | Shelf | Heat Bridge | Sneeze Guard | Front Shield | Etagere | Plate Warmer

FRONTBLIND_STAGE_BAMBOO_COV.

FRONTBLIND_STAGE_L_BAMBOO
Item No.: 38036
[LxWxH]: 1960 x 822 x 17 mm
weight: 9,2 kg

FRONTBLIND_STAGE_M_BAMBOO
Item No.: 38037
[LxWxH]: 1800 x 822 x 17 mm
weight: 8,3 kg

FRONTBLIND_STAGE_S_164_BAMBOO
Item No.: 38038
[LxWxH]: 1640 x 822 x 17 mm
weight: 7,8 kg

FRONTBLIND_STAGE_S_BAMBOO
Item No.: 38039
[LxWxH]: 1600 x 822 x 17 mm
weight: 7,7 kg

FRONTBLIND_STAGE_XS_BAMBOO
Item No.: 38040
[LxWxH]: 800 x 822 x 17 mm
weight: 4,2 kg

suitable for all STAGE tables
buffet height = 93,5 cm

FRONTBLINDS/available in five sizes/suitable for L, M, S_164, S and XS length

side view 1

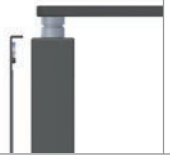

side view 2

mounting by magnets
and small hooks

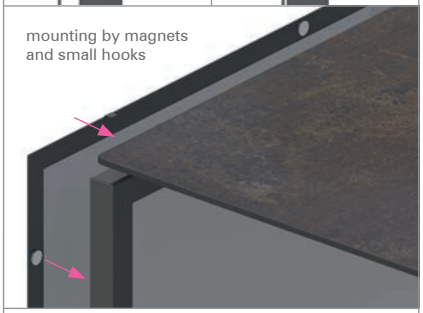

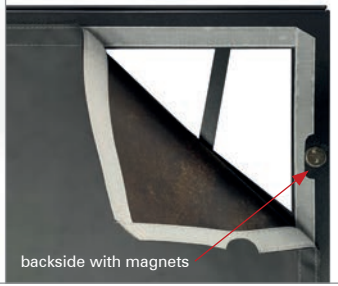

backside with magnets

MATERIAL+COLOR

basic
base: 100, 101
cover: 620, 621, 623, 624

option
all available colors in chapter
MATERIAL+COLOR

SIDEBLIND_STAGE_BAMBOO_COV.

SIDEBLIND_STAGE_80_BAMBOO
Item No.: 38041
[LxWxH]: 800 x 822 x 17 mm
weight: 4,1 kg

suitable for all STAGE tables
buffet height = 93,5 cm

SIDEBLINDS/available in two sizes for 80 and 50 cm buffet depth

SIDEBLIND_STAGE_50_BAMBOO
Item No.: 38042
[LxWxH]: 500 x 822 x 17 mm
weight: 2,8 kg

side view 1

side view 2

mounting by magnets
and long hook

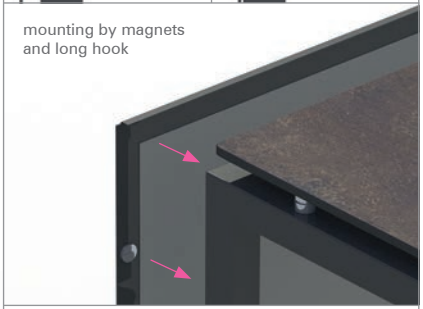

MATERIAL+COLOR

basic
base: 100,101
cover: 620, 621, 623, 624

option
all available colors in chapter
MATERIAL+COLOR

FRONTBLIND_STAGE_LEAF_COV.

FRONTBLIND_STAGE_L_LEAF
Item No.: 38022
[LxWxH]: 1960 x 822 x 17 mm
weight: 12,3 kg

FRONTBLIND_STAGE_M_LEAF
Item No.: 38023
[LxWxH]: 1800 x 822 x 17 mm
weight:11,4 kg

FRONTBLIND_STAGE_S_164_LEAF
Item No.: 38024
[LxWxH]: 1640 x 822 x 17 mm
weight: 10,3 kg

FRONTBLIND_STAGE_S_LEAF
Item No.: 38025
[LxWxH]: 1600 x 822 x 17 mm
weight: 10,2 kg

FRONTBLIND_STAGE_XS_LEAF
Item No.: 38026
[LxWxH]: 800 x 822 x 17 mm
weight: 5,4 kg

suitable for all STAGE tables
buffet height = 93,5 cm

FRONTBLINDS/available in five sizes/suitable for L, M, S_164, S and XS length

MATERIAL+COLOR

basic
base: 100, 101
cover: 620, 621, 623, 624

option
all available colors in chapter
MATERIAL+COLOR

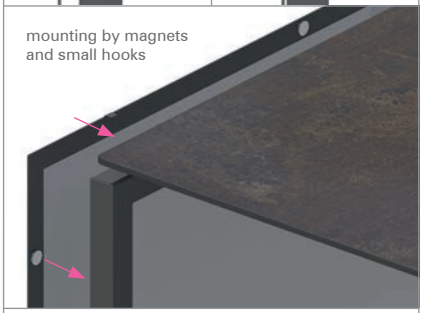

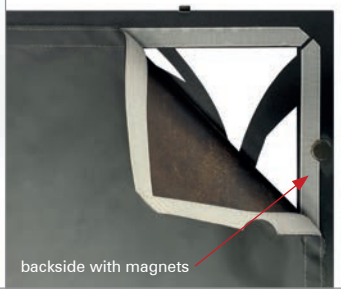

SIDEBLIND_STAGE_LEAF_COV.

SIDEBLIND_STAGE_80_LEAF
Item No.: 38027
[LxWxH]: 800 x 822 x 17 mm
weight: 5,3 kg

suitable for all STAGE tables
buffet height = 93,5 cm

SIDEBLINDS/available in two sizes for 80 and 50 cm buffet depth

SIDEBLIND_STAGE_50_LEAF
Item No.: 38028
[LxWxH]: 500 x 822 x 17 mm
weight: 3,4 kg

side view 1

side view 2

mounting by magnets
and long hook

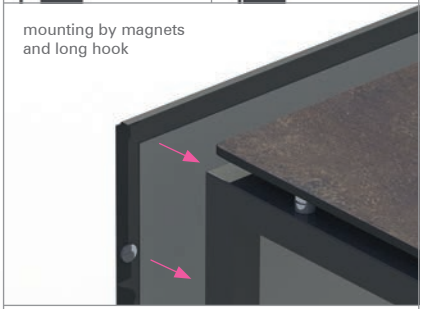

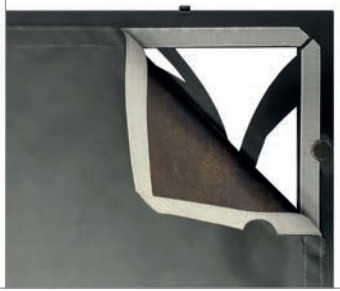

MATERIAL+COLOR

basic
base: 100,101
cover: 620, 621, 623, 624

option
all available colors in chapter
MATERIAL+COLOR

FRONTBLIND_STAGE_STRIPES_COV.

FRONTBLIND_STAGE_L_STRIPES
Item No.: 38062
[LxWxH]: 1960 x 822 x 17 mm
weight: 14,0 kg

FRONTBLIND_STAGE_M_STRIPES
Item No.: 38063
[LxWxH]: 1800 x 822 x 17 mm
weight: 12,6 kg

FRONTBLIND_STAGE_S_164_STRIPES
Item No.: 38064
[LxWxH]: 1640 x 822 x 17 mm
weight: 11,4 kg

FRONTBLIND_STAGE_S_STRIPES
Item No.: 38065
[LxWxH]: 1600 x 822 x 17 mm
weight: 11,3 kg

FRONTBLIND_STAGE_XS_STRIPES
Item No.: 38066
[LxWxH]: 800 x 822 x 17 mm
weight: 5,8 kg

suitable for all STAGE tables
buffet height = 93,5 cm

FRONTBLINDS/available in five sizes/suitable for L, M, S_164, S and XS length

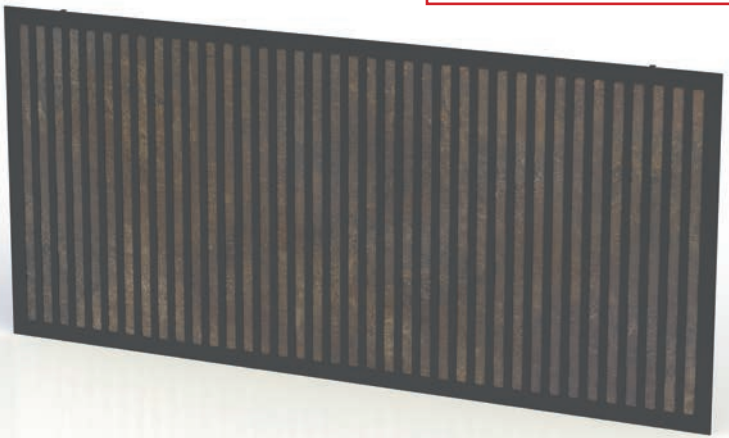

side view 1

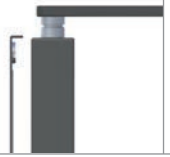

side view 2

mounting by magnets
and small hooks

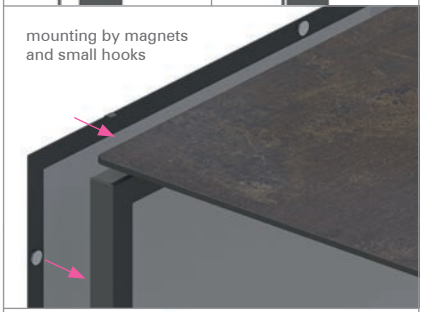

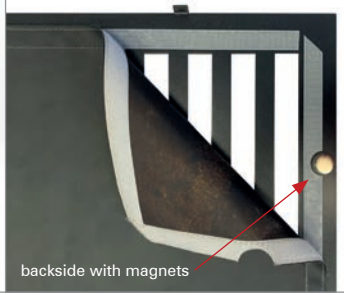

backside with magnets

MATERIAL+COLOR

basic
base: 100, 101
cover: 620, 621, 623, 624

option
all available colors in chapter
MATERIAL+COLOR

SIDEBLIND_STAGE_STRIPES_COV.

SIDEBLIND_STAGE_80_STRIPES
Item No.: 38067
[LxWxH]: 800 x 822 x 17 mm
weight: 5,8 7g

suitable for all STAGE tables
buffet height = 93,5 cm

SIDEBLINDS/available in two sizes for 80 and 50 cm buffet depth

SIDEBLIND_STAGE_50_STRIPES
Item No.: 38068
[LxWxH]: 500 x 822 x 17 mm
weight: 3,8 kg

side view 1

side view 2

mounting by magnets
and long hook

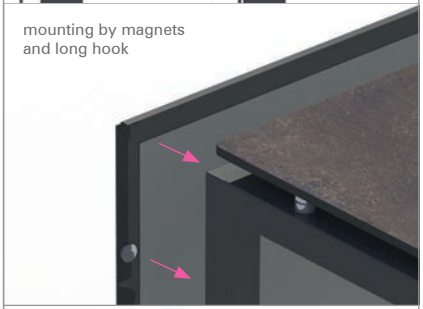

MATERIAL+COLOR

basic
base: 100,101
cover: 620, 621, 623, 624

option
all available colors in chapter
MATERIAL+COLOR

FRONTBLIND_STAGE

FRONTBLIND_STAGE_L
Item No.: 38043
[LxWxH]: 1960 x 822 x 17 mm
weight: 6,5 kg

FRONTBLIND_STAGE_M
Item No.: 38044
[LxWxH]: 1800 x 822 x 17 mm
weight: 6,0 kg

FRONTBLIND_STAGE_S_164
Item No.: 38045
[LxWxH]: 1640 x 822 x 17 mm
weight: 5,5 kg

FRONTBLIND_STAGE_S
Item No.: 38046
[LxWxH]: 1600 x 822 x 17 mm
weight: 5,3 kg

FRONTBLIND_STAGE_XS
Item No.: 38047
[LxWxH]: 800 x 822 x 17 mm
weight: 2,7 kg

suitable for all STAGE tables
buffet height = 93,5 cm

FRONTBLINDS/available in five sizes/suitable for L, M, S_164, S and XS length

MATERIAL+COLOR

basic
base: 100, 101
cover: 465, 466

option
all available colors in chapter
MATERIAL+COLOR

side view 1

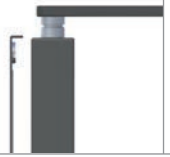

side view 2

mounting by magnets
and small hooks

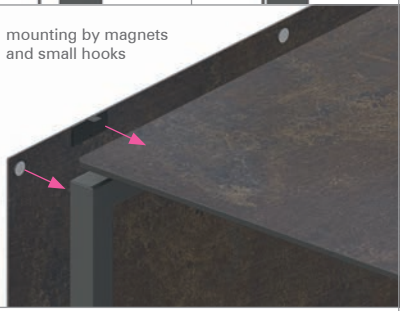

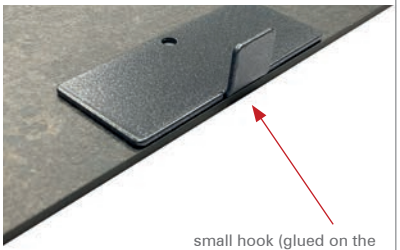

small hook (glued on the
compact laminate panel)

SIDEBLIND_STAGE

SIDEBLIND_STAGE_80
Item No.: 38048
[LxWxH]: 800 x 822 x 17 mm
weight: 2,7 kg

suitable for all STAGE tables
buffet height = 93,5 cm

SIDEBLINDS/available in two sizes for 80 and 50 cm buffet depth

SIDEBLIND_STAGE_50
Item No.: 38049
[LxWxH]: 500 x 822 x 17 mm
weight: 1,7 kg

side view 1

side view 2

mounting by magnets and long hook

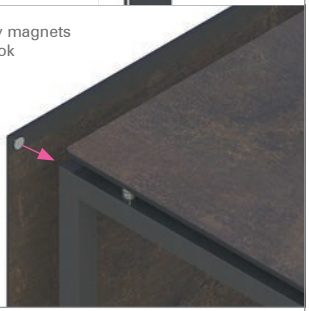

long hook (glued on the compact laminate panel)

MATERIAL+COLOR

basic
base: 100,101
cover: 465, 466

option
all available colors in chapter MATERIAL+COLOR

NEW
NEW
NEW

FRONTBLIND_APERTURE_STAGE

FRONTBLIND_APERTURE_STAGE_L
Item No.: 38057
[LxWxH]: 1960 x 822 x 27 mm
weight: 6,5 kg

FRONTBLIND_APERTURE_STAGE_M
Item No.: 38058
[LxWxH]: 1800 x 822 x 27 mm
weight: 6,0 kg

FRONTBLIND_APERTURE_STAGE_S_164
Item No.: 38059
[LxWxH]: 1640 x 822 x 27 mm
weight: 5,5 kg

FRONTBLIND_APERTURE_STAGE_S
Item No.: 38060
[LxWxH]: 1600 x 822 x 27 mm
weight: 5,3 kg

FRONTBLIND_APERTURE_STAGE_XS
Item No.: 38061
[LxWxH]: 800 x 822 x 27 mm
weight: 2,7 kg

suitable for all STAGE tables
buffet height = 93,5 cm

FRONTBLINDS/available in five sizes/suitable for L, M, S_164, S and XS length

side view 1

side view 2

mounting by magnets and small hooks

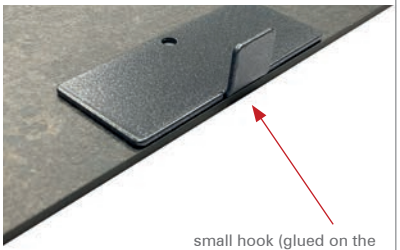

small hook (glued on the compact laminate panel)

MATERIAL+COLOR

basic
base: 100,101
cover: 465, 466

option
all available colors in chapter MATERIAL+COLOR

SHELF_47_STAGE_80

SHELF_47_STAGE_80_L
Item No.: 80083
[LxWxH]: 1900 x 728 x 473 mm
weight: 23,6 kg

SHELF_47_STAGE_80_M
Item No.: 80084
[LxWxH]: 1740 x 728 x 473 mm
weight: 22,9 kg

SHELF_47_STAGE_80_S_164
Item No.: 80085
[LxWxH]: 1580 x 728 x 473 mm
weight: 21,3 kg

SHELF_47_STAGE_80_S
Item No.: 80086
[LxWxH]: 1540 x 728 x 473 mm
weight: 22,4 kg

SHELF_47_STAGE_80_XS
Item No.: 80087
[LxWxH]: 740 x 728 x 473 mm
weight: 10,6 kg

MATERIAL+COLOR

basic
base: 100, 101
shelf: 465, 466

option
all available colors in chapter
MATERIAL+COLOR

3 x U-Bolts (size: L / M / S_164)

useable height = 41 cm

4 x U-Bolts (size: S)

useable height = 41 cm

2 x U-Bolts (size: XS)

useable height = 41 cm

SHELF_47_STAGE_50

SHELF_47_STAGE_50_L
Item No.: 50044
[LxWxH]: 1900 x 428 x 473 mm
weight: 14,2 kg

SHELF_47_STAGE_50_M
Item No.: 50045
[LxWxH]: 1740 x 428 x 473 mm
weight: 13,9 kg

SHELF_47_STAGE_50_S_164
Item No.: 50046
[LxWxH]: 1580 x 428 x 473 mm
weight: 13,3 kg

SHELF_47_STAGE_50_S
Item No.: 50047
[LxWxH]: 1540 x 428 x 473 mm
weight: 14,4 kg

SHELF_47_STAGE_50_XS
Item No.: 50048
[LxWxH]: 740 x 428 x 473 mm
weight: 6,9 kg

MATERIAL+COLOR

basic
base: 100,101
shelf: 465, 466

option
all available colors in chapter
MATERIAL+COLOR

3 x U-Bolts (size: L / M / S_164)

useable height = 41 cm

4 x U-Bolts (size: S)

useable height = 41 cm

2 x U-Bolts (size: XS)

useable height = 41 cm

SHELF_STAGE

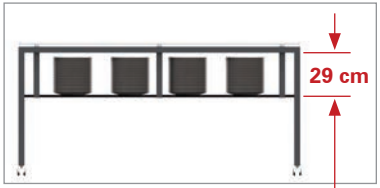

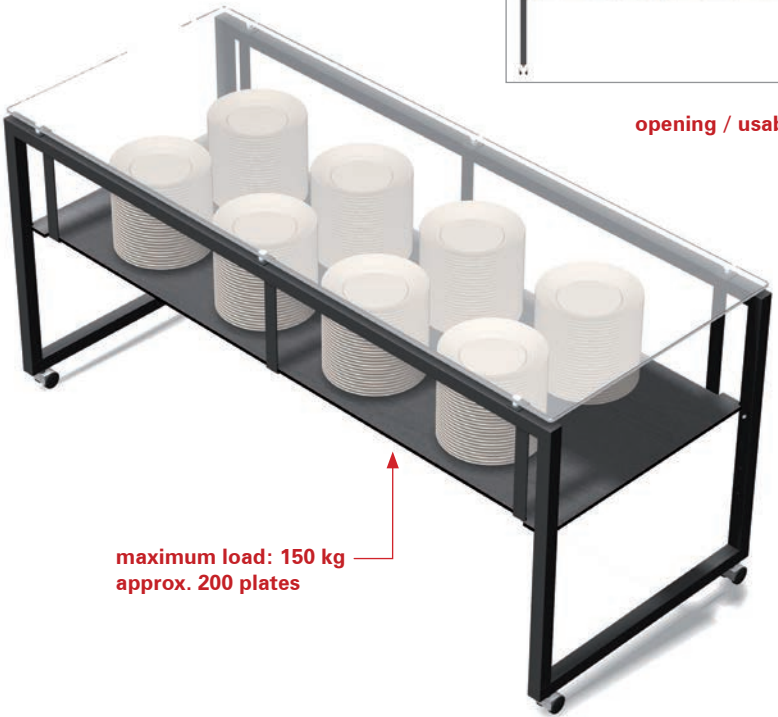

connection between table and U-Bolt

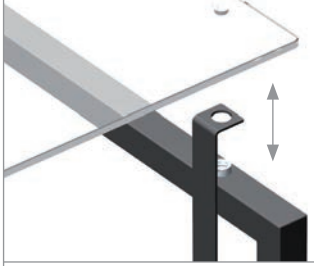

shelf for STAGE_80/size: M

shelf for STAGE_80/size: XS

SHELF_STAGE_80

SHELF_STAGE_80_L
Item No.: 80010
[LxWxH]: 1900 x 728 x 353 mm
weight: 23,0 kg

SHELF_STAGE_80_M
Item No.: 80011
[LxWxH]: 1740 x 728 x 353 mm
weight: 22,3 kg

SHELF_STAGE_80_S_164
Item No.: 80058
[LxWxH]: 1580 x 728 x 353 mm
weight: 20,7 kg

SHELF_STAGE_80_S
Item No.: 80038
[LxWxH]: 1540 x 728 x 353 mm
weight: 21,6 kg

SHELF_STAGE_80_XS
Item No.: 80012
[LxWxH]: 740 x 728 x 353 mm
weight: 10,2 kg

MATERIAL+COLOR

basic
base: 100, 101
shelf: 465, 466

option
all available colors in chapter
MATERIAL+COLOR

3 x U-Bolts (size: L / M / S_164)

useable height = 29 cm

4 x U-Bolts (size: S)

useable height = 29 cm

2 x U-Bolts (size: XS)

useable height = 29 cm

SHELF_STAGE_50

SHELF_STAGE_50_L
Item No.: 50005
[LxWxH]: 1900 x 428 x 353 mm
weight: 13,6 kg

SHELF_STAGE_50_M
Item No.: 50006
[LxWxH]: 1740 x 428 x 353 mm
weight: 13,3 kg

SHELF_STAGE_50_S_164
Item No.: 50023
[LxWxH]: 1580 x 428 x 353 mm
weight: 12,7 kg

SHELF_STAGE_50_S
Item No.: 50021
[LxWxH]: 1540 x 428 x 353 mm
weight: 13,6 kg

SHELF_STAGE_50_XS
Item No.: 50007
[LxWxH]: 740 x 428 x 353 mm
weight: 6,5 kg

MATERIAL+COLOR

basic
base: 100,101
shelf: 465, 466

option
all available colors in chapter
MATERIAL+COLOR

3 x U-Bolts (size: L / M / S_164)

useable height = 29 cm

4 x U-Bolts (size: S)

useable height = 29 cm

2 x U-Bolts (size: XS)

useable height = 29 cm

SHELF_LOW_STAGE_80

SHELF_LOW_STAGE_80_L
Item No.: 80068
[LxWxH]: 1950 x 740 x 50 mm
weight: 24,9 kg

SHELF_LOW_STAGE_80_M
Item No.: 80069
[LxWxH]: 1790 x 740 x 50 mm
weight: 22,8 kg

SHELF__LOW_STAGE_80_S_164
Item No.: 80070
[LxWxH]: 1630 x 740 x 50 mm
weight: 21,0 kg

SHELF_LOW_STAGE_80_S
Item No.: 80071
[LxWxH]: 1590 x 740 x 50 mm
weight: 20,4 kg

SHELF_LOW_STAGE_80_XS
Item No.: 80064
[LxWxH]: 790 x 740 x 10 mm
weight: 8,3 kg

MATERIAL+COLOR

basic
base: 100
shelf: 465, 466

option
all available colors in chapter
MATERIAL+COLOR

size: L / M / S_164 / S
underside always with metal strut (top view)

size: L / M / S_164 / S
underside always with metal strut (bottom view)

size: XS
underside always without metal strut (both sides look the same)

SHELF_LOW_STAGE_50

SHELF_LOW_STAGE_50_L
Item No.: 50032
[LxWxH]: 1950 x 440 x 50 mm
weight: 15,0 kg

SHELF_LOW_STAGE_50_M
Item No.: 50033
[LxWxH]: 1790 x 440 x 50 mm
weight: 14,1 kg

SHELF_LOW_STAGE_50_S_164
Item No.: 50034
[LxWxH]: 1630 x 440 x 50 mm
weight: 11,0 kg

SHELF_LOW_STAGE_50_S
Item No.: 50035
[LxWxH]: 1590 x 440 x 50 mm
weight: 10,0 kg

SHELF_LOW_STAGE_50_XS
Item No.: 50026
[LxWxH]: 790 x 440 x 10 mm
weight: 5,1 kg

MATERIAL+COLOR

basic
base: 100
shelf: 465, 466

option
all available colors in chapter
MATERIAL+COLOR

size: L / M / S_164 / S
underside always with metal strut (top view)

size: L / M / S_164 / S
underside always with metal strut (bottom view)

size: XS
underside always without metal strut (both sides look the same)

Heat Bridge

sneeze guard with heating and LED illumination

only available for 230V

HEATBRIDGE_BEER | complete solution with sneeze guard, heating and LED illumination

Item No.: 66002
[LxWxH]: 1800 x 500 x 440 mm
weight: 20 kg

Base (feet)
steel, powder-coated
profile 50 x 25 mm

Heating element (infrared technic)
Beer (manufacturer)
model: SOLARIS
power: 5 x 300 W / 230V
color/material: steel, powder-coated
anthracite

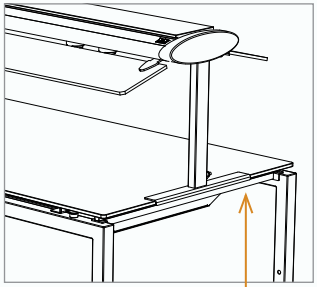

special feet – perfect connection to the table

+ heavy load strut – additional item to stabilize the table-top (see page 222)

front view

side view

HEAT + LED

only available for 230V

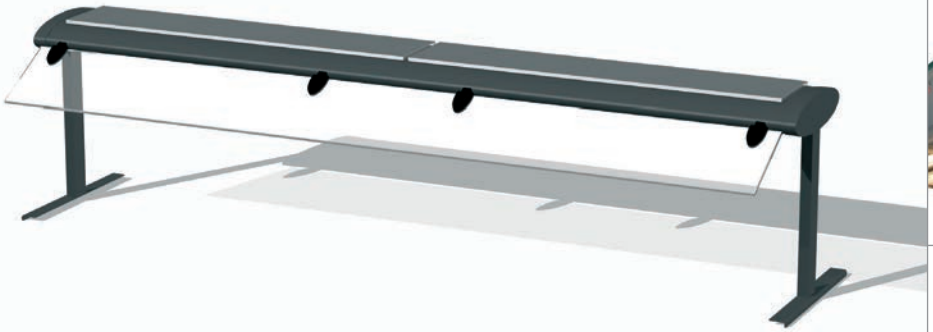

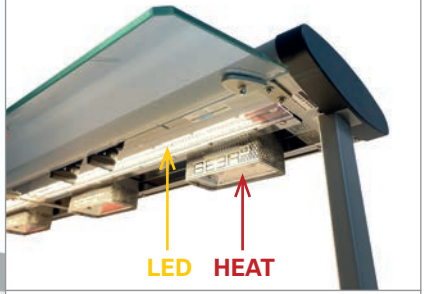

> sneeze guard (available with one or two side protections)
> length: 196 cm (STAGE_L), 180 cm (STAGE_M), 162 cm (STAGE_S_164 and STAGE_S), 80 cm (STAGE_XS)

combination with STAGE table

MATERIAL+COLOR

basic
base: 100,101

option
all available colors in chapter MATERIAL+COLOR

SNEEZEGUARD_BEER | solution with sneeze guard and LED illumination (no heating)

Item No.: 66026
[LxWxH]: 1800 x 500 x 440 mm
weight: 20 kg

Base (feet)
steel, powder-coated
profile 50 x 25 mm

LED illumination
Beer (manufacturer)
model: SOLARIS
power: 230V

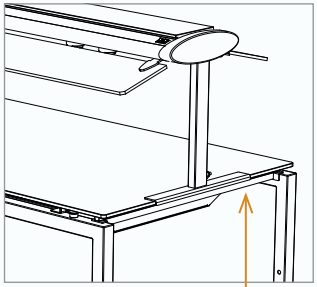

special feet – perfect connection to the table

+ **heavy load strut** – additional item to stabilize the table-top (see page 222)

front view

side view

only LED

only available for 230V

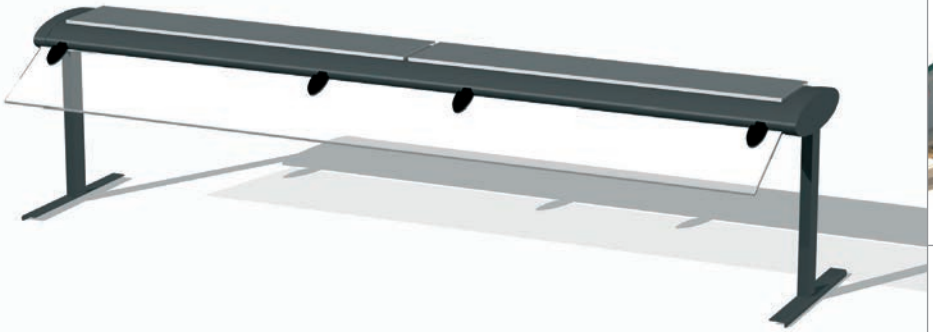

> sneeze guard (available with one or two side protections)
> length: 196 cm (STAGE_L), 180 cm (STAGE_M), 162 cm (STAGE_S_164 and STAGE_S), 80 cm (STAGE_XS)

MATERIAL+COLOR

basic
base: 100,101

option
all available colors in chapter MATERIAL+COLOR

combination with STAGE table

Heat Bridge

useful items to complete your tables

HEATBRIDGE_BARTSCHER_180

Item No.: 66004
[LxWxH]: 1845 x 360 x 445 mm
weight: 8,2 kg

Base (feet)
steel, powder-coated
profile 15 x 15 mm

Heating element (infrared technic)
model: IHR 1730 / item-no.: 114006
power: 1,73 kW, 230V, 50/60 Hz
color/material: silver, satin aluminum

additional item to keep the food warm

only available for 230V

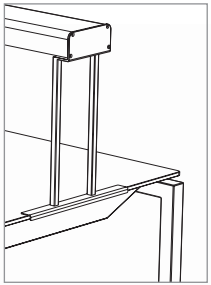

special feet – perfect connection to the table

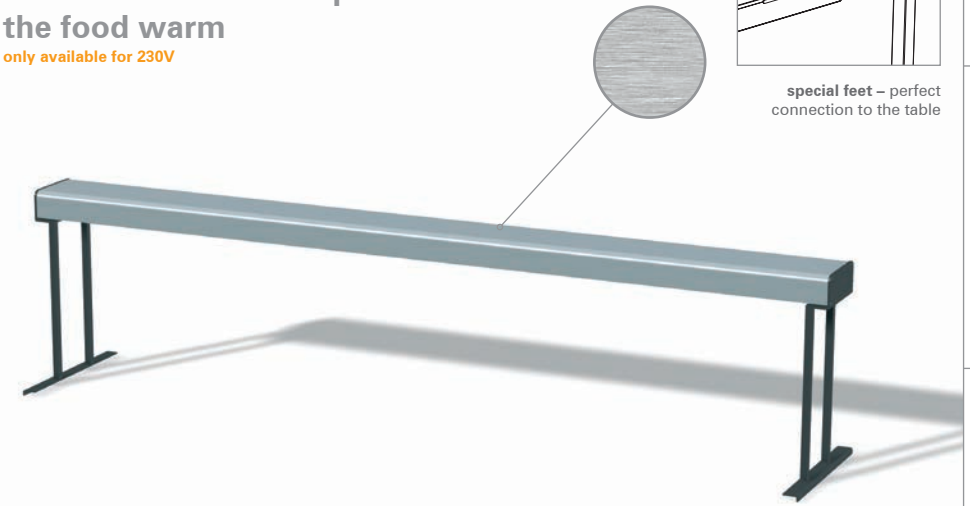

front view

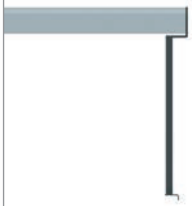

side view

underside view:
infrared heat technic

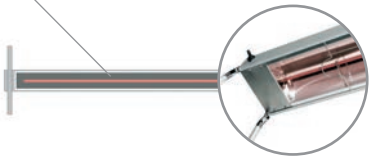

combination with STAGE table

MATERIAL+COLOR

basic
base: 100,101

option
all available colors in chapter MATERIAL+COLOR

HEATBRIDGE_BARTSCHER_80

Item No.: 66032
[LxWxH]: 804 x 360 x 445 mm
weight: 5,3 kg

Base (feet)
steel, powder-coated
profile 15 x 15 mm

Heating element (infrared technic)
model: IHR 650 / item-no.: 114001
power: 0,8 kW, 230V, 50/60 Hz
color/material: silver, satin aluminum

additional item to keep the food warm

only available for 230V

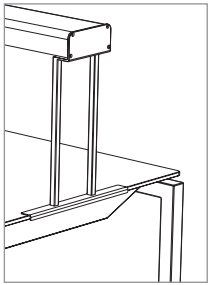

special feet – perfect connection to the table

front view

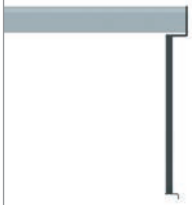

side view

underside view:
infrared heat technic

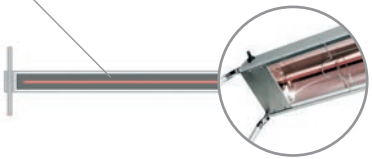

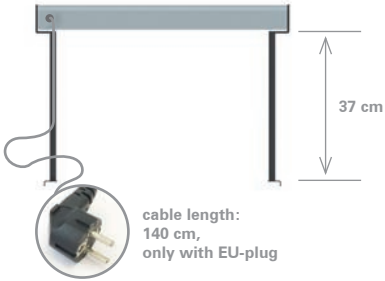

cable length:
140 cm,
only with EU-plug

MATERIAL+COLOR

basic
base: 100,101

option
all available colors in chapter MATERIAL+COLOR

Keep your buffet warm with heat from the top

The Stayhot heat lamp can be installed on every VENTA STAGE table (front-or backside) with a special clamp which is only available at VENTA. The regular Stayhot clamp does not fit onto the VENTA table!

Height:	635 mm
Shade:	H 218 / d =180 mm
Table Clamp:	95 x 60 x 78 mm
Voltage/Power:	230 V / 250 W
Heat Source:	Philips infrared lamp 2700K

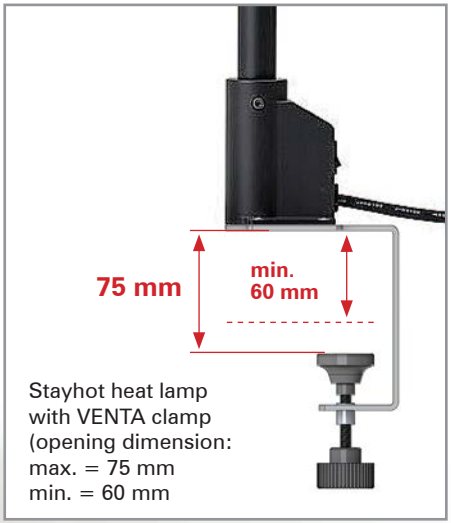

Stayhot heat lamp
with VENTA clamp
(opening dimension:
max. = 75 mm
min. = 60 mm

only available for 230V

If you want to mount the STAYHOT lamps on a table with a compact laminate or glass top, you need to position the lamps over the metal connectors to achieve a perfect fixation.

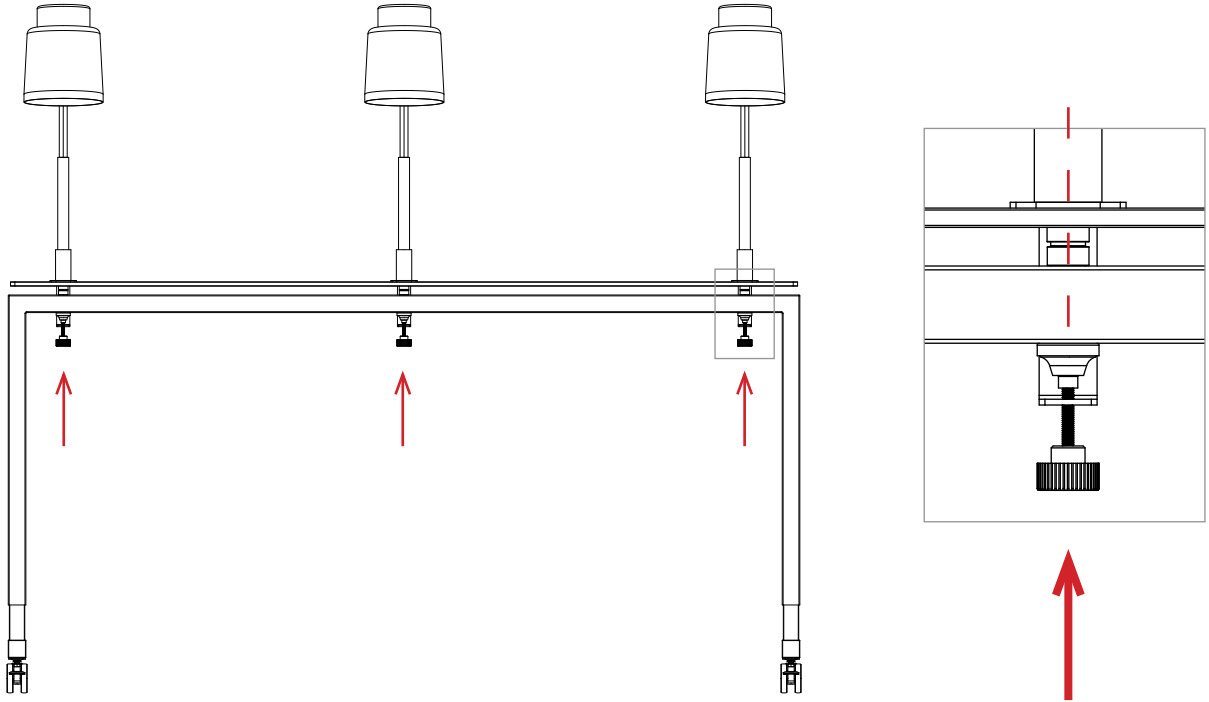

Front mounting (guest side) of a STAYHOT lamp is also possible (placed at the connector position).
Please notice: The BLIND is only implementable in material COMPACT LAMINATE, no metal blinds!

No metal blinds!

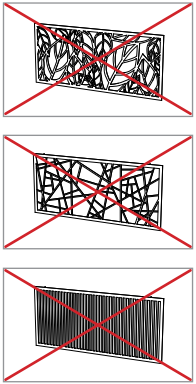

>>> various decors available

Alternative positioning of STAYHOT lamps: Please use additional strut to stabilize the table-top.

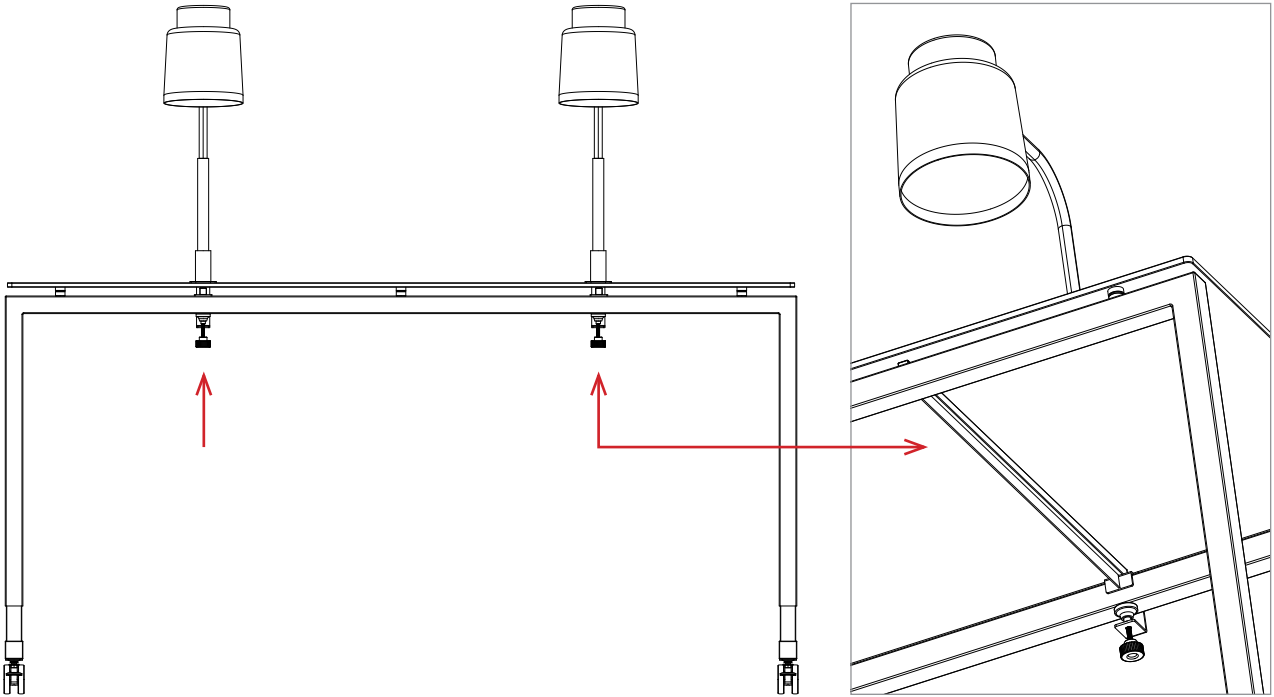

table, view from below

Depending on the number of STAYHOT lamps installed, please select the suitable extension cables, plugbars and cable ducts.

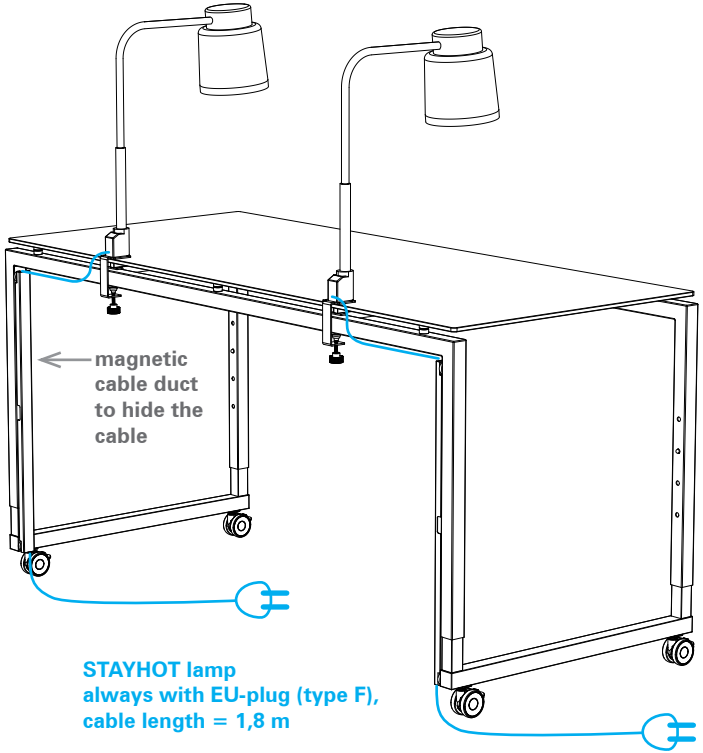

magnetic cable duct (details on page 224)
available in length: 400 mm, 610 mm, 770 mm

extension cable (details on page 227)
available with plug (type F, G, J, I, M)
cable length = 5 m

magnetic plugbar (details on page 227)
available with plug (type F, G, J, I, M)
cable length = 5 m

Sneeze Guard

one or double side

Sneezeguard suitable for all STAGE tables

The new sneezeguard is available as one side or double side version.
Protect your buffet and offers a second level for decoration items.

Double Side:
L: 1960 x 654 x 385 mm (66059)
M: 1800 x 654 x 385 mm (66061)
S_164: 1640 x 654 x 385 mm (66063)
S: 1600 x 654 x 385 mm (66065)
XS: 800 x 654 x 385 mm (66067)

One Side:
L: 1960 x 507 x 385 mm (66058)
M: 1800 x 507 x 385 mm (66060)
S_164: 1640 x 507 x 385 mm (66062)
S: 1600 x 507 x 385 mm (66064)
XS: 800 x 507 x 385 mm (66066)

Base
steel, powder-coated anthracite (100)
profile 15 x 15 mm

Top and Side
transparent, safety glass, 6 mm

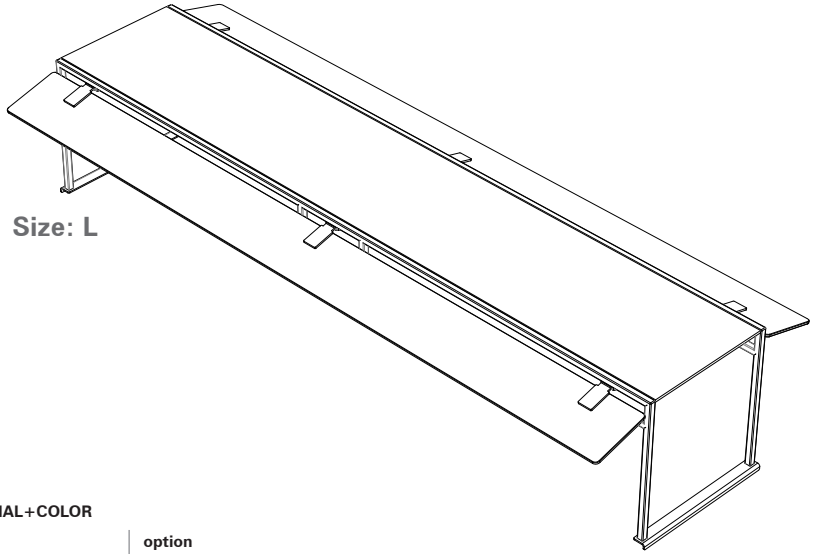

Size: L

MATERIAL+COLOR

basic
base: 100, 101
glass top/side: 300

option
all available colors in chapter
MATERIAL+COLOR

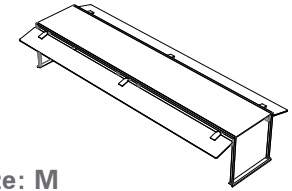

Size: M

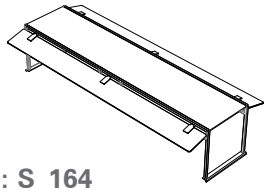

Size: S_164

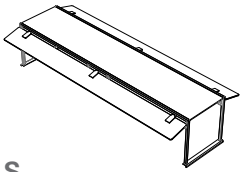

Size: S

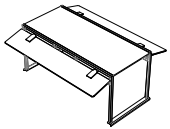

Size: XS

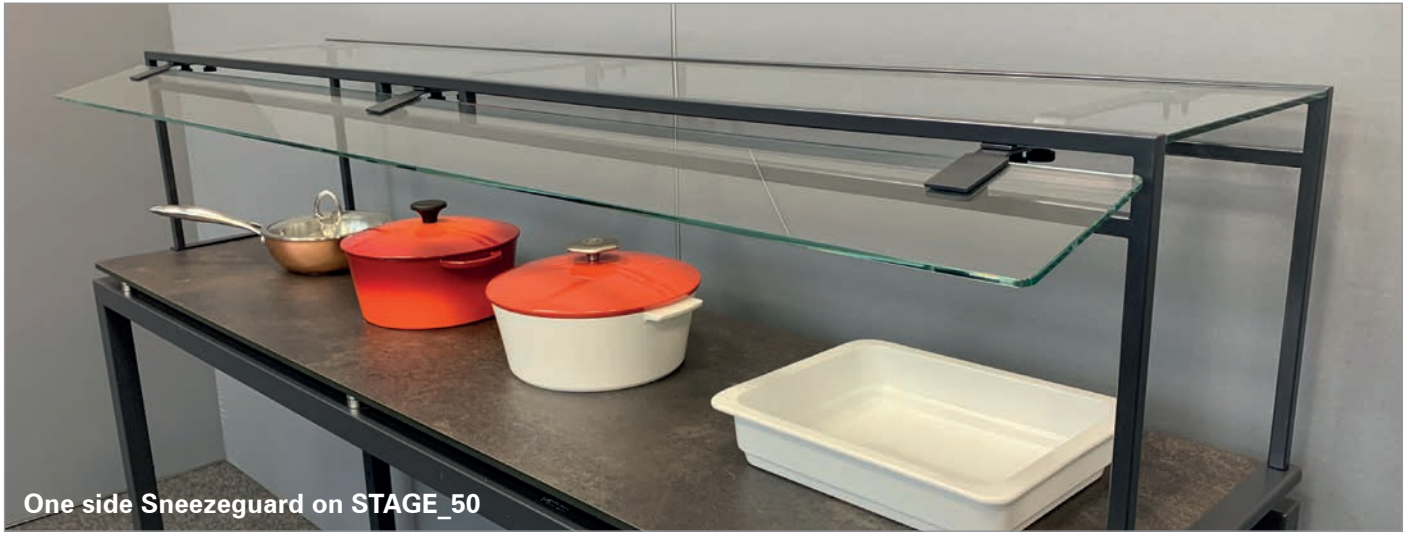

One side Sneezeguard on STAGE_50

Sneezeguard suitable for all STAGE tables

The new sneezeguard protects your buffet and allows to open the lid of the chafing-dish behind.

Overview all models
L: 1960 x 400 x 620 mm (66080)
M: 1800 x 400 x 620 mm (66081)
S_164: 1640 x 400 x 620 mm (66082)
S: 1600 x 400 x 620 mm (66083)
XS: 800 x 400 x 620 mm (66084)

Base
steel, powder-coated anthracite (100)
bended profile 40 x 3 mm

Glass panel
transparent, safety glass, 8 mm

The length of the sneeze guard corresponds to the length of the table.
The angular shape of the feet guarantees a safe stand on the table-top. The bottom of the feet is covered with felt so that the sneeze guard can be quickly pushed back and forth on the table-top.

Size: L

MATERIAL+COLOR

basic
base: 100, 101
glass panel: 300

option
all available colors in chapter
MATERIAL+COLOR

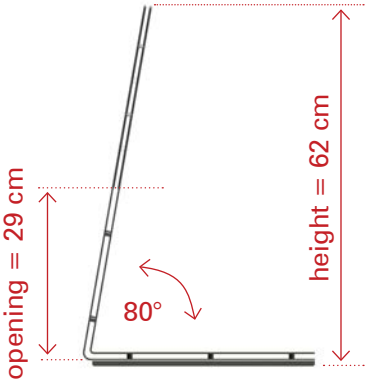

details of design

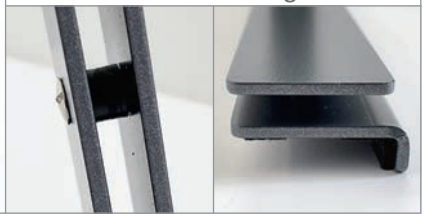

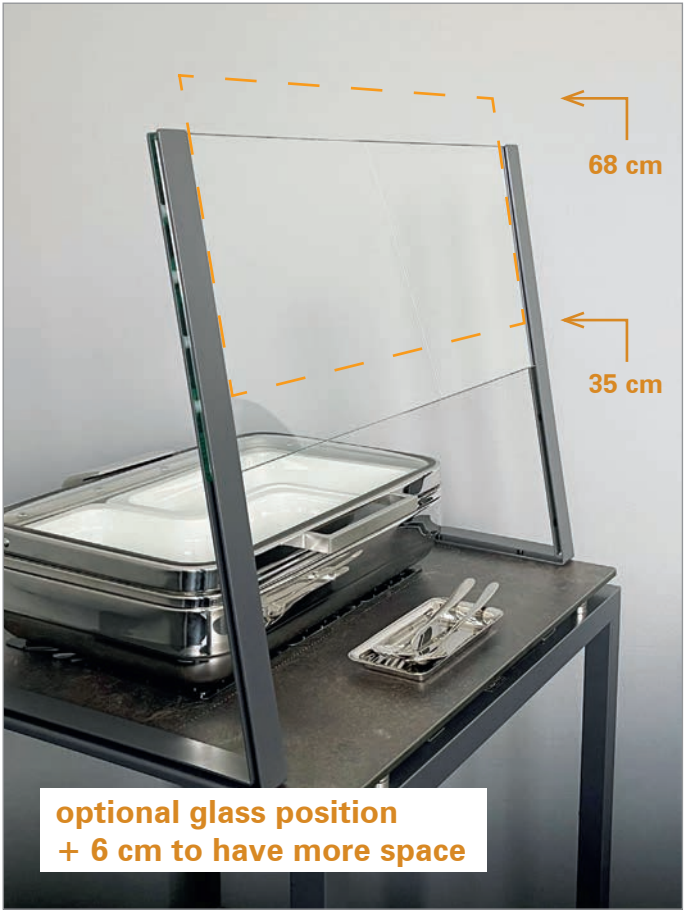
68 cm
35 cm
optional glass position
+ 6 cm to have more space

Frontshield

transparent acrylic shields to protect your buffet

Frontshield and heat lamp (mounted at the front side) only work with BLINDS in material compact laminate.

protect your VENTA buffet with transparent acrylic shields

The new sneezeguard is available as one side or double side version.
Protect your buffet and offers a second level for decoration items.

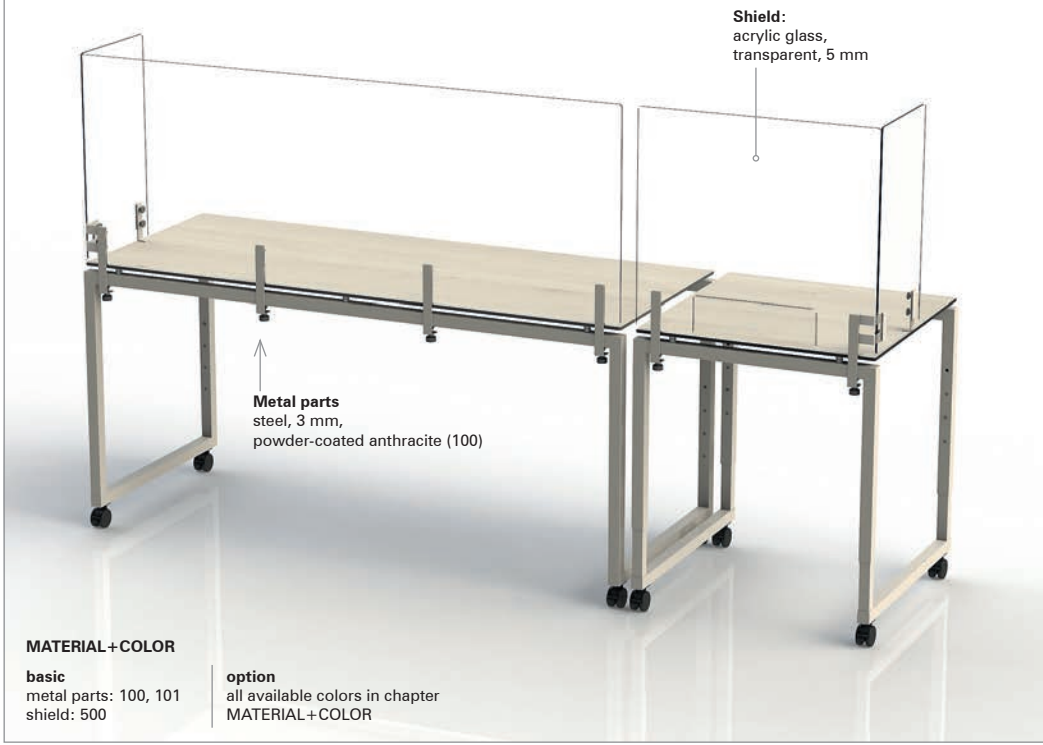

MATERIAL+COLOR

basic
metal parts: 100, 101
shield: 500

option
all available colors in chapter
MATERIAL+COLOR

application:

Mount the transparent acrylic glass to your VENTA table and be protected from the corona virus by preventing the guests from touching food and dishes.

A service employee behind the table arranges the guest's selection on a plate and serves the plate through the service gantry.
Every FRONTSHIELD can be mounted with special clamps on the table base frame.

The SIDESHIELD will be mounted on an already installed FRONTSHIELD. The material of the clamps is stainless steel with powder coating according to the color of the base frame. The shield itself is made in transparent acrylic glass.

FRONTSHIELD

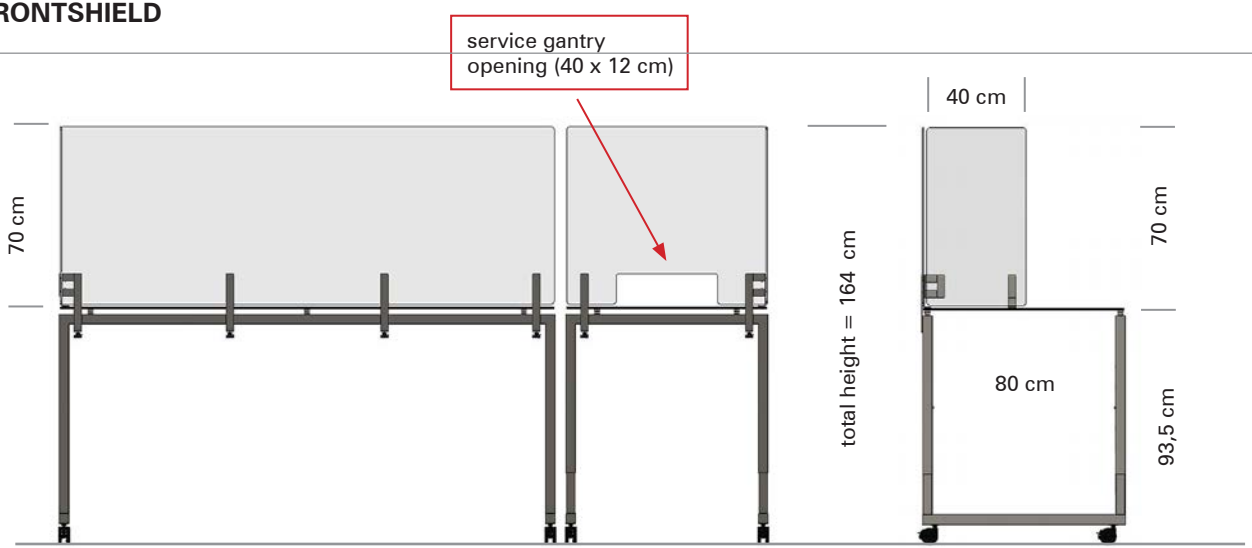

Trolley:
optional equipment for the storage of the front- and sideshields

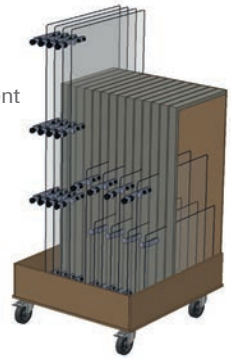

FRONTSHIELD - prevents the guest from touching food and dishes.

FRONTSHIELD

FRONTSHIELD_STAGE_L_70
Item No.: 66043
[LxWxH]: 1950 x 43 x 820 mm

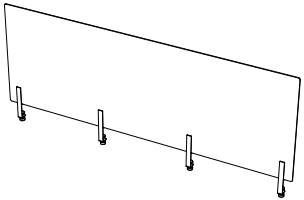

FRONTSHIELD_STAGE_M_70
Item No.: 66044
[LxWxH]: 1790 x 43 x 820 mm

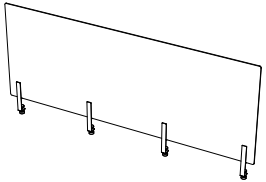

FRONTSHIELD_STAGE_S_164_70
Item No.: 66045
[LxWxH]: 1630 x 43 x 820 mm

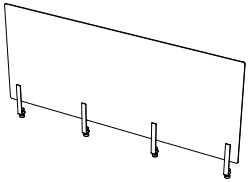

FRONTSHIELD_STAGE_S_70
Item No.: 66046
[LxWxH]: 1590 x 43 x 820 mm

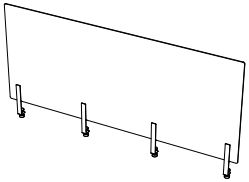

FRONTSHIELD_STAGE_XS_70
Item No.: 66047
[LxWxH]: 790 x 43 x 820 mm

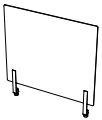

FRONTSHIELD_APERTURE_STAGE_L_70
Item No.: 66049
[LxWxH]: 1950 x 43 x 820 mm

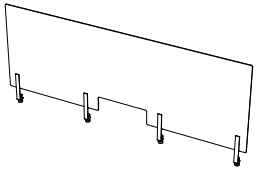

FRONTSHIELD_APERTURE_STAGE_M_70
Item No.: 66050
[LxWxH]: 1790 x 43 x 820 mm

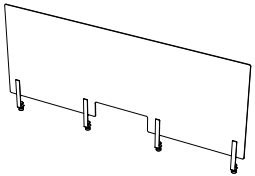

FRONTSHIELD_AP._STAGE_S_164_70
Item No.: 66051
[LxWxH]: 1630 x 43 x 820 mm

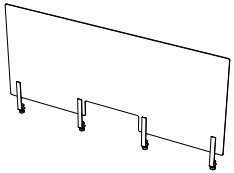

FRONTSHIELD_APERTURE_STAGE_S_70
Item No.: 66052
[LxWxH]: 1590 x 43 x 820 mm

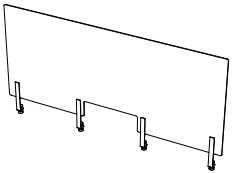

FRONTSHIELD_SIDE_AP._STAGE_S_70
Item No.: 66053
[LxWxH]: 1590 x 43 x 820 mm

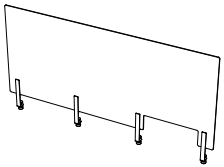

FRONTSHIELD_APERTURE_STAGE_XS_70
Item No.: 66055
[LxWxH]: 790 x 43 x 820 mm

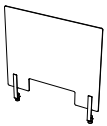

All FRONTSHIELD work only with BLINDS in material COMPACT LAMINATE.

No metal blinds possible!

SIDESHIELDS

The picture shows the right SIDESHIELD (view from the backside).
It is also possible to mount the metal parts on the other side and create the left SIDESHIELD.

Version to cover the half side of the depth of 80 cm table.

SIDESHIELD_STAGE_39_70
Item No.: 66048
[LxWxH]: 390 x 43 x 820 mm

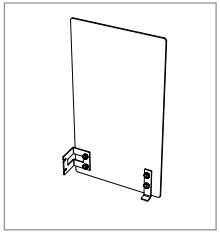

SIDESHIELD_STAGE_48_70
Item No.: 66057
[LxWxH]: 480 x 43 x 820 mm

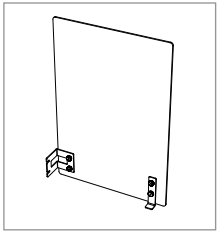

The picture shows the right SIDESHIELD (view from the backside).
It is also possible to mount the metal parts on the other side and create the left SIDESHIELD.

Version to cover the complete depth of 50 cm table.

Both versions can only be mounted on an already installed FRONTSHIELD.

STAGE_ETAGERE | set of 4

Item No.: 32001100300
L: 750 x 400 x 280 mm
M: 700 x 360 x 255 mm
XS: 320 x 320 x 230 mm (two pieces)
total weight: 18,5 kg

Base
steel, powder-coated anthracite
profile 15 x 15 mm,
weight: 1,4 kg/1,3 kg/2 x 0,6 kg

Table-top
safety glass 6 mm,
weight: 4,4 kg/3,7 kg/2 x 1,5 kg

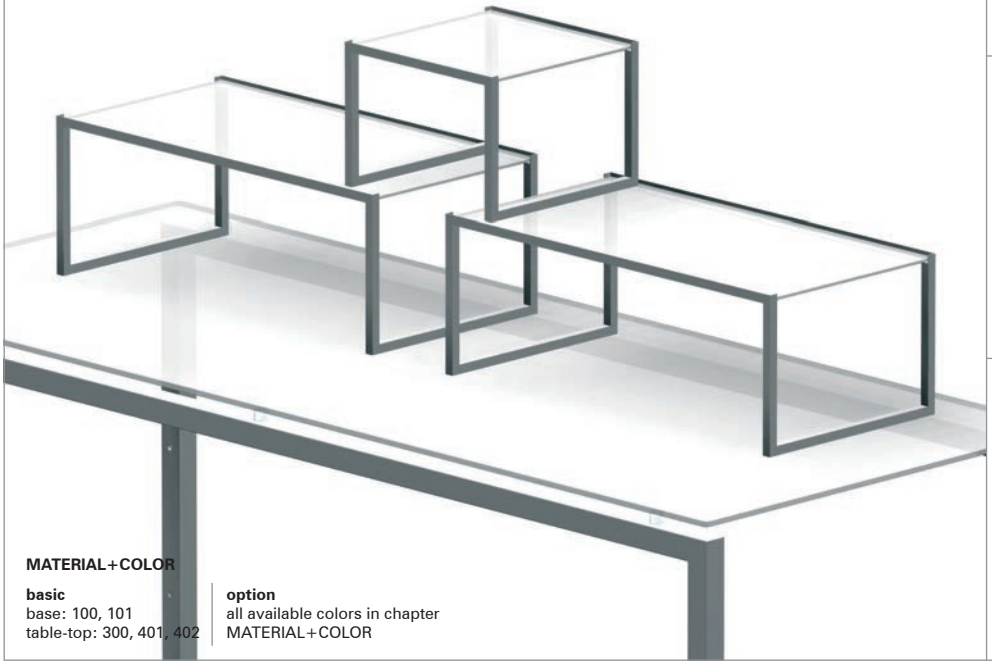

MATERIAL+COLOR

basic
base: 100, 101
table-top: 300, 401, 402

option
all available colors in chapter
MATERIAL+COLOR

front view

side view

top view

set of four pieces

stackable for storage

Radicchio

STAGE_ETAGERE_COOL_SQ

Item No.: 32005
[LxWxH]: 400 x 400 x 150 mm
weight: 7,0 kg

Base
steel, powder-coated
profile 15 x 15 mm
weight: 7 kg

Table-top
safety glass 6 mm, white glass,
underside white colored,
weight: 2,2 kg

Bowl (for COOL_PLATES)
steel, 1 mm, bended, powder-coated
weight: 1,5 kg

COOL_PLATE
350 x 350 x 25 mm
polystyrol, black
weight: 2,4 kg

2h cooling 5°-10°C

on the glass surface without electricity

>>> also available as rectangular model [size: 850 x 420 x 200 mm] with 2 x COOL_PLATES inside Item No.: 32006

works only with glass surface

MATERIAL+COLOR

basic
base: 100, 101
table-top: 303, 307

option
all available colors in chapter MATERIAL+COLOR

66003 / COOL_PLATE

explosion view / main parts

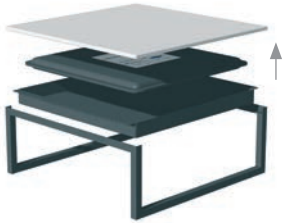

99129 / Trolley_COOL_PLATES_8

Plate Warmer

perfectly integrated in the buffet line

only available for 230V

NEW
LED PANEL
to Illuminate
the Meals
NEW
table with
integrated
PLATE
WARMER

STAGE_50_XS_PLATE_STATION_KIT_RRV-H1

Item No.: 51027
[LxWxH]: 800 x 500 x 935 mm
weight: 31 kg

Base
steel, powder-coated
profile 40 x 40 mm,
weight: 12,6 kg

Table-top
compact panel 10 mm
790 x 490 mm
weight: 5,6 kg

Mounting frame
steel, powder-coated
profile 40 x 40 mm
weight: 4 kg

FRONT- and SIDEBLINDS
compact panel: 3 mm
decor: ceramic anthracite
weight: 8,8 kg

Individual
other colors on request

warm plates
in a STAGE_50_XS

MATERIAL+COLOR

basic
base: 100,101
table-top: 465, 466

option
all available colors in chapter
MATERIAL+COLOR

explosion view/delivery contents

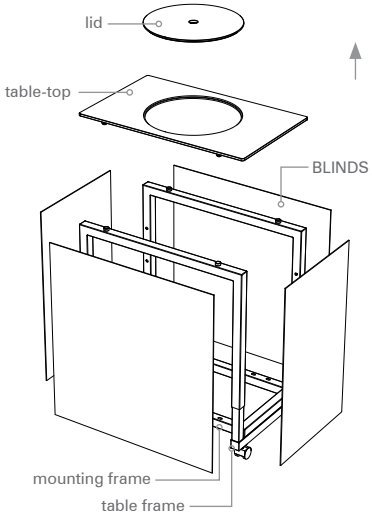

separate item/not included
Item No.: 11039

only available for 230V
RIEBER plater warmer (model: RRV-H1)

STAGE_50_XS_PS_KIT | PANEL OPTIONS

Item No.: 51028
[LxWxH]: 800 x 500 x 935 mm
weight: 22,2 kg

Base
steel, powder-coated
profile 40 x 40 mm,
weight: 12,6 kg

Table-top + Lid
compact panel 10 mm,
790 x 490 mm,
weight: 5,6 kg

Mounting frame
steel, powder-coated
profile 40 x 40 mm
weight: 4 kg

Individual
other colors on request

KIT without panels you have to add them with your order

table on wheels

MATERIAL+COLOR

basic
base: 100,101
table-top: 465, 466

option
all available colors in chapter
MATERIAL+COLOR

explosion view/delivery contents

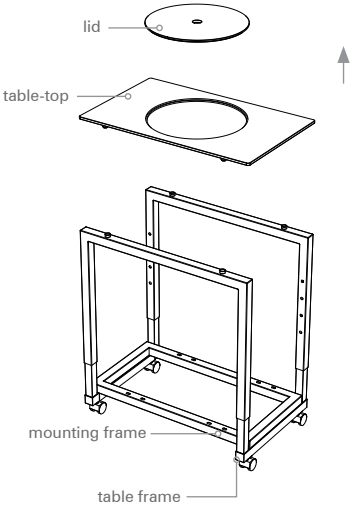

separate item/not included
Item No.: 11039

only available for 230V
RIEBER plater warmer (model: RRV-H1)

Special Buffet Furniture

Service-Cart | Column Table | Corner Table

STAGE_50_XS_SERVICE-CART

Item No.: 51041
[LxWxH]: 800 x 500 x 935 mm
total weight: 32,5 kg

Base
2 x main frame 6,6 kg
2 x table leg 5,0 kg
steel, powder-coated
profile 40 x 40 mm, with height compensation

4 x Castor
diameter = 65 mm
weight: 0,5 kg

Height adjustable:
775 mm (lowest height)
855, 935, 1015 mm

Table-top
compact laminate 10 mm
weight: 8,8 kg

SHELF_STAGE_50_XS
Item No.: 50007
[LxWxH]: 740 x 428 x 353 mm
weight: 6,5 kg

SHELF_LOW_STAGE_50_XS
Item No.: 50026
[LxWxH]: 790 x 440 x 10 mm
weight: 5,1 kg

Additional equipment
(please order separately)
blinds in metal with decor cut-outs (BAMBOO, LEAF, STRIPES design) or in compact panel (thickness of 3 mm), decor: e.g. ceramic anthracite and many more options

MATERIAL+COLOR

basic
base: 100,101
table-top: 465, 466
shelf: 465, 466

option
all available colors in chapter MATERIAL+COLOR

The small buffet table STAGE_50_XS and two additional shelves result in a new product: the VENTA SERVICE-CART.

This very useful table offers a wide range of applications.

Small ordering table for serving, as a small tea trolley for meetings or simply equipped with a blind as practical storage space.

QUAD_230 (set of 2 items)

Item No.: 28001
QUAD_230
[LxWxH]: 1600 x 700 x 900 mm
weight: 32 kg

Base
steel, powder-coated
profile 30 x 30 mm, not foldable
weight: 10 kg

Table-top
safety glass 10 mm,
to be fixed to the base,
weight: 22 kg

QUAD_ETAGERE_160
[LxWxH]: 1100 x 350 x 260 mm
weight: 11,3 kg

4 x Feet
stainless steel, matt abraded
weight: 4 x 0,7 kg = 2,8 kg

Table-top
safety glass 10 mm,
bolted with the feet,
weight: 8,5 kg

Top View

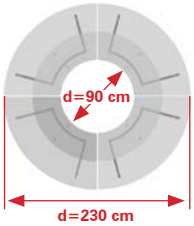

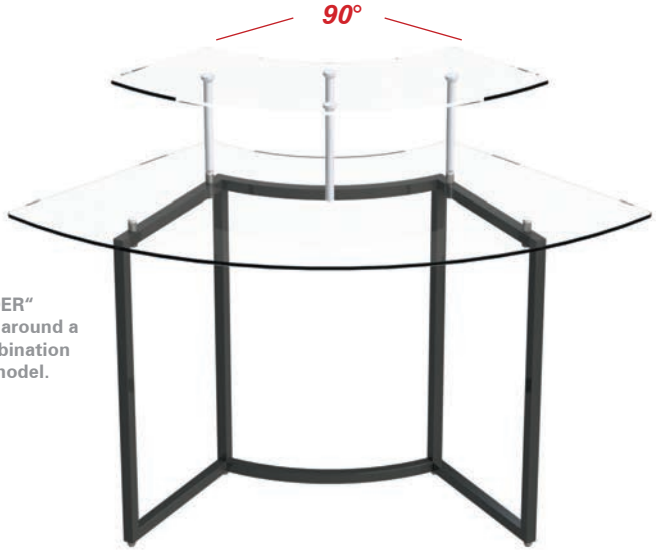

The „ALL-ROUNDER“ placed in a circle, around a column or in combination with the SCAPE model.

MATERIAL+COLOR

basic
base: 100,101
table-top: 300, 465, 466

option
all available colors in chapter
MATERIAL+COLOR

4 x QUAD
around a column
(ø=230 cm)

compilation of
4 x QUAD and
4 x SCAPE

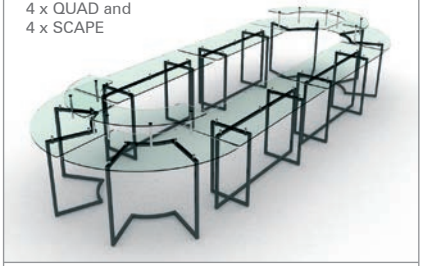

Item No.: 99135
Trolley for 4 x QUAD

weight: 67 kg [empty]/240 kg [full]

STAGE_80_XS_45_RO

Item No.: 81141
[LxWxH]: 800 x 770 x 775 mm
height adjustable: 855, 935, 1015 mm
total weight: 32 kg

Base
steel, powder-coated
profile 40 x 40 mm, with height compensation

Table-top
compact laminate 10 mm

Shelf_47
steel, powder-coated
compact laminate 10 mm

Shelf_Low
compact laminate 10 mm

MATERIAL+COLOR

basic
base: 100,101
table-top: 465, 466
shelf: 465, 466

option
all available colors in chapter MATERIAL+COLOR

Item No.: 81140
[LxWxH]: 800 x 770 x 775 mm
height adjustable: 855, 935, 1015 mm
total weight: 31,6 kg

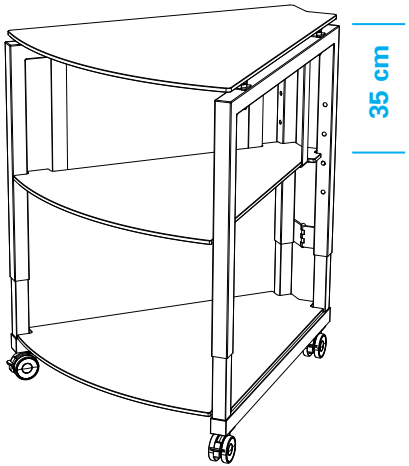

Style your buffet in any shape

The 45° table allows you to create various setups with the rectangular STAGE tables.
With the optional shelfs you have attractive and functional corner points in your buffet line.

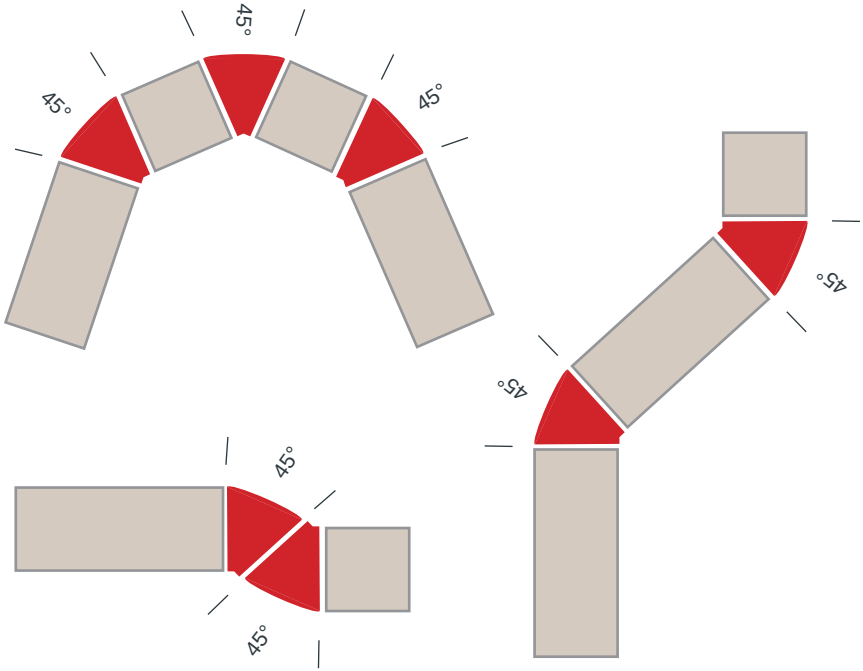

Single parts

STAGE_80_XS_45_RO
Item No.: 81114
[LxWxH]: 800 x 770 x 935 mm
weight: 20,3 kg

SHELF_STAGE_80_XS_45_RO
Item No.: 80115
[LxWxH]: 825 x 660 x 350 mm
weight: 6,0 kg

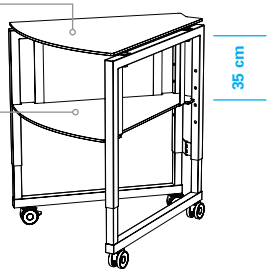

SHELF_47_STAGE_80_XS_45_RO
Item No.: 80116
[LxWxH]: 825 x 660 x 470 mm
weight: 6,4 kg

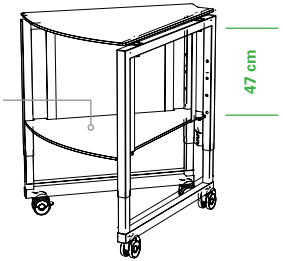

SHELF_LOW_STAGE_80_XS_45_RO
Item No.: 80117
[LxWxH]: 825 x 675 x 10 mm
weight: 5,3 kg

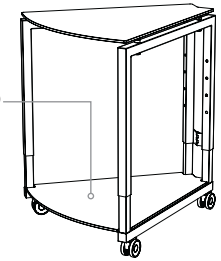

STAGE_80_XS_90_RO

Item No.: 81137
[LxWxH]: 900 x 900 x 775 mm
height adjustable: 855, 935, 1015 mm
total weight: 42,6 kg

Base
steel, powder-coated
profile 40 x 40 mm, with height compensation

Table-top
compact laminate 10 mm

Shelf_47
steel, powder-coated
compact laminate 10 mm

Shelf_Low
compact laminate 10 mm

MATERIAL+COLOR

basic
base: 100,101
table-top: 465, 466
shelf: 465, 466

option
all available colors in chapter MATERIAL+COLOR

Item No.: 81134
[LxWxH]: 900 x 900 x 775 mm
height adjustable: 855, 935, 1015 mm
total weight: 42,2 kg

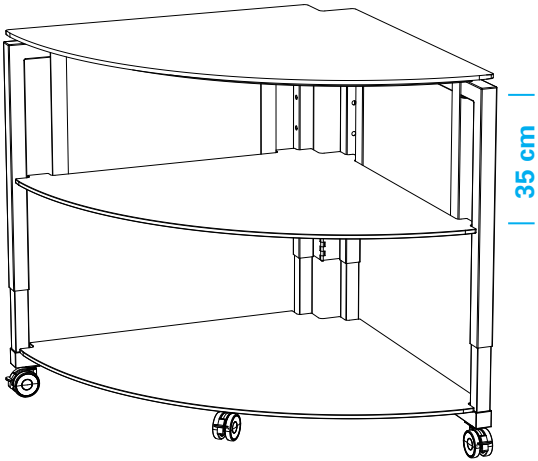

Style your buffet in any shape

The 90° table allows to create various setups with the rectangular STAGE tables.
With the optional shelfs you have attractive and functional corner points in your buffet line.

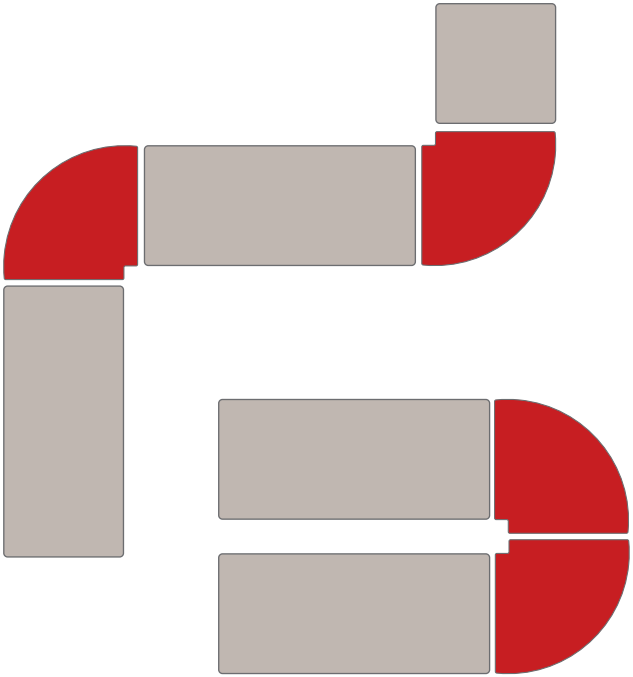

Single parts

STAGE_80_XS_45_RO
Item No.: 81124
[LxWxH]: 800 x 770 x 935 mm
weight: 20,3 kg

SHELF_STAGE_80_XS_90_RO
Item No.: 80125
[LxWxH]: 860 x 860 x 370 mm
weight: 9,1 kg

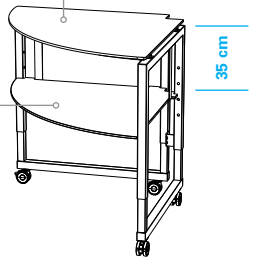

SHELF_47_STAGE_80_XS_90_RO
Item No.: 80126
[LxWxH]: 860 x 860 x 490 mm
weight: 9,5 kg

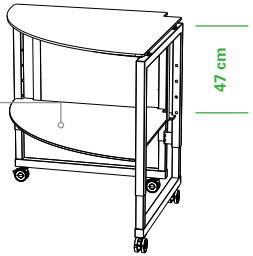

SHELF_LOW_STAGE_80_XS_90_RO
Item No.: 80127
[LxWxH]: 880 x 880 x 130 mm
weight: 8,4 kg

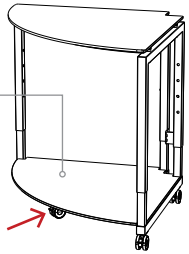

>>> with additional castor (d = 65 mm) to ensure stability under high load

Special Buffet Furniture

DUCK_STATION | TABLE_RACK

DUCK_STATION

Item No.: 32011
[LxWxH]: 762 x 430 x 800 mm
total weight: 8,4 kg

Base
material: steel, powder-coated,
profile 15 x 15 mm
weight: 5,3 kg

Upper cross bar
material: stainless steel
dimension: 765 x 16 x 17 mm
weight: 0,3 kg

Tray
material: stainless steel
dimension: 762 x 430 x 16 mm
weight: 2,76 kg

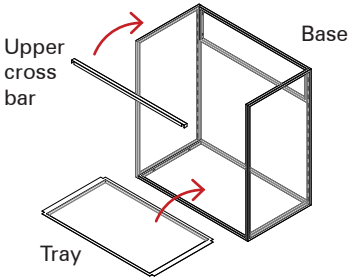

including 4 x meat hook (100 mm)

OPTIONAL EQUIPMENT
modification set for DUCK STATION
Item No.: 32018

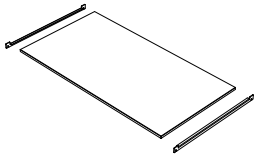

Please choose the number of shelves for your purpose to create a TABLE_RACK.

MATERIAL+COLOR

basic
base: 100,101
+ stainless steel (199)

option
all available colors in chapter
MATERIAL+COLOR

TABLE_RACK

Item No.: 32010
[LxWxH]: 762 x 430 x 800 mm
total weight: 18,3 kg

Base
material: steel, powder-coated,
profile 15 x 15 mm
weight: 6,0 kg

Shelf
material: compact laminate 10 mm
dimension: 743 x 395 mm
weight: 4,1 kg

Shelf (alternate material)
material: glass, 6 mm
dimension: 743 x 395 mm
weight: 4,3 kg

OPTIONAL EQUIPMENT
modification set for TABLE RACK
Item No.: 32017

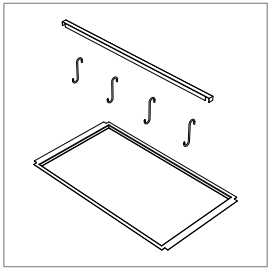

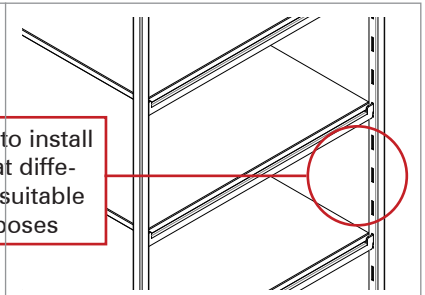

grid of 5 cm to install the shelves at different heights suitable for your purposes

MATERIAL+COLOR

basic	**option**
base: 100,101 table-top: 300, 465, 466	all available colors in chapter MATERIAL+COLOR

TABLE_RACK_V2

Item No.: 32019
[LxWxH]: 762 x 430 x 800 mm
total weight: 20,7 kg

Base
material: steel, powder-coated,
profile 15 x 15 mm
weight: 6,0 kg

Shelf
material: compact laminate 10 mm
dimension: 743 x 395 mm
weight: 4,1 kg

Shelf (alternate material)
material: glass, 6 mm
dimension: 743 x 395 mm
weight: 4,3 kg

inclination adjustable in two angles 7°or 14°

horizontal position is also possible

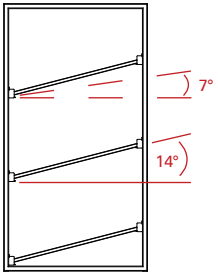

OPTIONAL EQUIPMENT
modification_set_for_sloping_shelves
Item No.: 32020

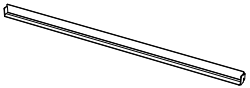

6 x angle rail for converting a TABLE RACK (horizontal shelves only) into a TABLE RACK with the option for inclined shelves

MATERIAL+COLOR

basic	**option**
base: 100,101 table-top: 300, 465, 466	all available colors in chapter MATERIAL+COLOR

Foldable Buffet Tables

SCAPE | LEVEL

SCAPE_70 | Foldable Table System

> foldable table base
> available in 3 heights (75 cm, 90 cm, 105 cm)
> with or without lower-tray
> square or round table-top

SCAPE_70 | Foldable Table System

connection from the foot to the table top through a screw (not removable)

one adjustable foot on the bottom of the base frame

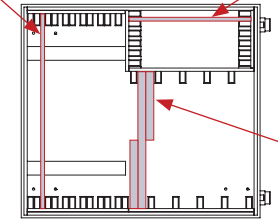

Item No.: 99137
[LxWxH]: 780 x 870 x 670 mm
weight: 45,0 kg

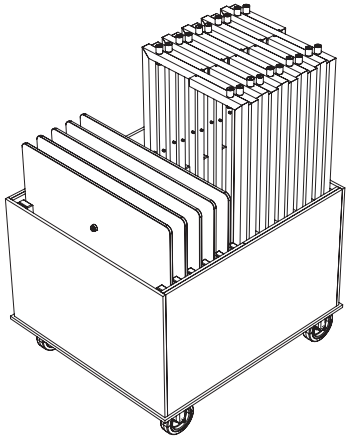

SCAPE_70_SQ_75

Item No.: 24010
[LxWxH]: 700 x 700 x 750 mm
total weight: 13,3 kg

Base
foldable base frame without side holder
steel, powder-coated
profile 30 x 30 mm
weight: 6,3 kg

Table-top
compact panel, 700 x 700 x 10 mm, underside
with 4 x connectors
weight: 7,0 kg

SCAPE_70_SQ_90

Item No.: 24011
[LxWxH]: 700 x 700 x 900 mm
total weight: 13,8 kg

Base
foldable base frame without side holder
steel, powder-coated
profile 30 x 30 mm
weight: 6,8 kg

Table-top
compact panel, 700 x 700 x 10 mm, underside
with 4 x connectors
weight: 7,0 kg

SCAPE_70_SQ_105

Item No.: 24012
[LxWxH]: 700 x 700 x 1050 mm
total weight: 14,3 kg

Base
foldable base frame without side holder
steel, powder-coated
profile 30 x 30 mm
weight: 7,3 kg

Table-top
compact panel, 700 x 700 x 10 mm, underside
with 4 x connectors
weight: 7,0 kg

MATERIAL+COLOR

basic	**option**
base: 100, 101 table-top: 300, 465, 466	all available colors in chapter MATERIAL+COLOR

SCAPE_70_RO_75

Item No.: 24019
[LxWxH]: 700 x 700 x 750 mm
total weight: 11,8 kg

Base
foldable base frame without side holder
steel, powder-coated anthracite (100)
profile 30 x 30 mm
weight: 6,3 kg

Table-top
compact panel, d = 700mm x 10 mm,
underside with 4 x connectors
weight: 5,5 kg

SCAPE_70_RO_90

Item No.: 24020
[LxWxH]: 700 x 700 x 900 mm
total weight: 12,3 kg

Base
foldable base frame without side holder
steel, powder-coated anthracite (100)
profile 30 x 30 mm
weight: 6,8 kg

Table-top
compact panel, d = 700 x 10 mm,
underside with 4 x connectors
weight: 5,5 kg

SCAPE_70_RO_105

Item No.: 24021
[LxWxH]: 700 x 700 x 1050 mm
total weight: 12,8 kg

Base
foldable base frame without side holder
steel, powder-coated anthracite (100)
profile 30 x 30 mm
weight: 7,3 kg

Table-top
compact panel, d = 700 x 10 mm,
underside with 4 x connectors
weight: 5,5 kg

MATERIAL+COLOR

basic	**option**
base: 100,101 table-top: 300, 465, 466	all available colors in chapter MATERIAL+COLOR

SCAPE_70_SQ_75_T

Item No.: 24022
[LxWxH]: 700 x 700 x 750 mm
total weight: 15,9 kg

Base
foldable base frame with side holder
steel, powder-coated
profile 30 x 30 mm, weight: 6,3 kg

Table-top
compact panel, 700 x 700 x 10 mm, underside with 4 x connectors, weight: 7,0 kg

Lower-tray
compact panel, 425 x 425 x 10 mm
weight: 2,6 kg

SCAPE_70_SQ_90_T

Item No.: 24023
[LxWxH]: 700 x 700 x 900 mm
total weight: 16,4 kg

Base
foldable base frame with side holder
steel, powder-coated
profile 30 x 30 mm, weight: 6,8 kg

Table-top
compact panel, 700 x 700 x 10 mm, underside with 4 x connectors, weight: 7,0 kg

Lower-tray
compact panel, 425 x 425 x 10 mm
weight: 2,6 kg

SCAPE_70_SQ_105_T

Item No.: 24024
[LxWxH]: 700 x 700 x 1050 mm
total weight: 16,9 kg

Base
foldable base frame with side holder
steel, powder-coated
profile 30 x 30 mm, weight: 7,3 kg

Table-top
compact panel, 700 x 700 x 10 mm, underside with 4 x connectors, weight: 7,0 kg

Lower-tray
compact panel, 425 x 425 x 10 mm
weight: 2,6 kg

MATERIAL+COLOR

basic	option
base: 100, 101 table-top: 300, 465, 466	all available colors in chapter MATERIAL+COLOR

SCAPE_70_RO_75_T

Item No.: 24025
[LxWxH]: 700 x 700 x 750 mm
total weight: 13,8 kg

Base
foldable base frame without side holder
steel, powder-coated
profile 30 x 30 mm, weight: 6,3 kg

Table-top
compact panel, d = 700mm x 10 mm, underside with
4 x connectors, weight: 5,5 kg

Lower-tray
compact panel, d = 425 x 10 mm
weight: 2,0 kg

SCAPE_70_RO_90_T

Item No.: 24026
[LxWxH]: 700 x 700 x 900 mm
total weight: 14,3 kg

Base
foldable base frame without side holder
steel, powder-coated
profile 30 x 30 mm, weight: 6,8 kg

Table-top
compact panel, d = 700 x 10 mm, underside with
4 x connectors, weight: 5,5 kg

Lower-tray
compact panel, d = 425 x 10 mm
weight: 2,0 kg

SCAPE_70_RO_105_T

Item No.: 24027
[LxWxH]: 700 x 700 x 1050 mm
total weight: 14,8 kg

Base
foldable base frame without side holder
steel, powder-coated
profile 30 x 30 mm, weight: 7,3 kg

Table-top
compact panel, d = 700 x 10 mm, underside with
4 x connectors, weight: 5,5 kg

Lower-tray
compact panel, d = 425 x 10 mm
weight: 2,0 kg

MATERIAL+COLOR

basic	**option**
base: 100,101 table-top: 300, 465, 466	all available colors in chapter MATERIAL+COLOR

SCAPE_180

Item No.: 24002
[LxWxH]: 1800 x 700 x 900 mm
total weight: 30,3 kg

Base
foldable base frame
steel, powder-coated
profile 30 x 30 mm, weight: 13,3 kg

Table-top
compact panel, 1800 x 700 x 10 mm,
underside with 7 x connectors
weight: 17,0 kg

Height options
table height = 750 mm
table height = 1050 mm

Alternative:

Table-top
safety glass 10 mm
weight: 31 kg

MATERIAL+COLOR

basic
base: 100, 101
table-top: 300, 465, 466

option
all available colors in chapter
MATERIAL+COLOR

connection between table-top and base

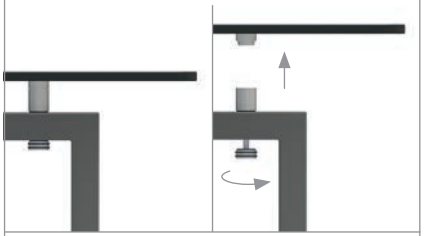

folding-system

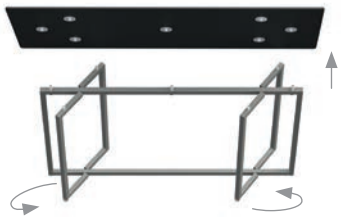

Item No.: 99136
Trolley for maximum 5 x SCAPE_180

weight: 72 kg [empty] / 223,5 kg [full]

LEVEL_150 | set of 3 items

Item No.: 26001

LEVEL_Table_150
[LxWxH]: 1500 x 750 x 840 mm
weight: 19,0 kg

Base
foldable base frame
steel, powder-coated
profile 30 x 30 mm, weight: 8,0 kg

Table-top
compact panel, 1800 x 700 x 10 mm,
underside with 3 x connectors
weight: 11,0 kg

LEVEL_ETAGERE_100
[LxWxH]: 1000 x 500 x 260 mm
weight: 7,6 kg

Feet
stainless steel, matt abraded
weight: 3 x 0,7 kg

Table-top
compact panel, 1000 x 500 x 10 mm,
underside with 3 x connectors
weight: 5,5 kg

LEVEL_ETAGERE_60
[LxWxH]: 600 x 300 x 200 mm
weight: 3,5 kg

Feet
stainless steel, matt abraded
weight: 3 x 0,5 kg

Table-top
compact panel, 600 x 300 x 10 mm,
underside with 3 x connectors
weight: 2,0 kg

MATERIAL+COLOR

basic
base: 100,101
table-top: 300, 465, 466

option
all available colors in chapter
MATERIAL+COLOR

connection between table-top and feet

folding-system

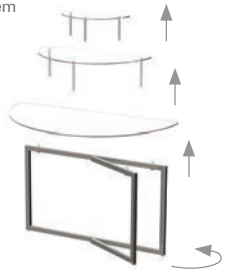

Item No.: 99134
Trolley for max. 4 x LEVEL_150

weight: 77 kg [empty] / 197,4 kg [full]

Cocktail Tables + Bar Area

Cocktail Table | High Table | High Stool | Hospi Desk | Backbar | Side Table | Mobile Bar

SET_70 / versions of material + color

SET_70 | glass top

Item No.: 23001
[LxWxH]: 700 x 700 x 1050 mm
weight: 18,5 kg

Base
steel, powder-coated
profile 30 x 30 mm, can be folded
weight: 7 kg

Table-top
safety glass 10 mm, ø = 700 mm,
to be fixed to the base,
weight: 10 kg

Lower-tray
safety glass 4 mm, ø = 425 mm
weight: 1,5 kg

MATERIAL+COLOR

basic
base: 100,101
table-top: 300
lower-tray: 300

option
all available colors in chapter
MATERIAL+COLOR

connection between table-top and base

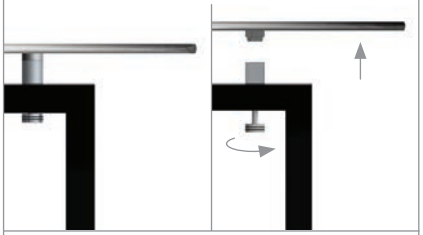

folding-system

Trolley for SET_70 tables with table-top and lower tray in material glass.

Item No.: 99101
Trolley for 10 x cocktail table_SET_70

weight: 35 kg [empty] / 220 kg [full]

SET_65 | glass top

Item No.: 23004
[LxWxH]: 650 x 650 x 1050 mm
weight: 18,6 kg

Base
steel, powder-coated
profile 30 x 30 mm, can be folded
weight: 7 kg

Table-top
safety glass 10 mm, 650 x 650 mm,
to be fixed to the base,
weight: 10 kg

Lower-tray
safety glass 4 mm, 425 x 425 mm
weight: 1,6 kg

The table top has a size of 650 x 650 mm to ensure the stability of the cocktail table.

MATERIAL+COLOR

basic
base: 100,101
table-top: 300
lower-tray: 300

option
all available colors in chapter
MATERIAL+COLOR

Trolley for SET_65 tables with table-top and lower tray in material glass.

connection between table-top and base

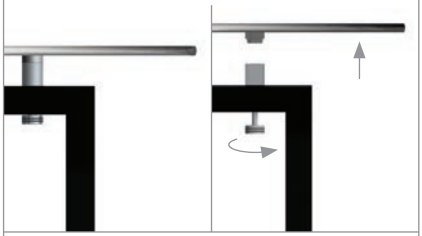

folding-system

Item No.: 99103
Trolley for 10 x cocktail table_SET_65

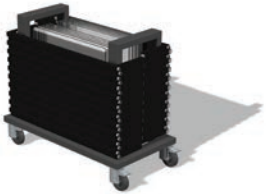

weight: 35 kg [empty] / 221 kg [full]

SET_70 | compact laminate

Item No.: 23001
[LxWxH]: 700 x 700 x 1050 mm
weight: 14,0 kg

Base
steel, powder-coated
profile 30 x 30 mm, can be folded
weight: 7 kg

Table-top
comapct laminate10 mm, ø = 700 mm,
to be fixed to the base,
weight: 5,5 kg

Lower-tray
compact laminate 10 mm,
ø = 425 mm,
weight: 1,5 kg

MATERIAL+COLOR

basic
base: 100,101
table-top: 465, 466
lower-tray: 465, 466

option
all available colors in chapter
MATERIAL+COLOR

This special trolley is necessary for SET_70 with lower-tray in material compact laminate.

connection between table-top and base

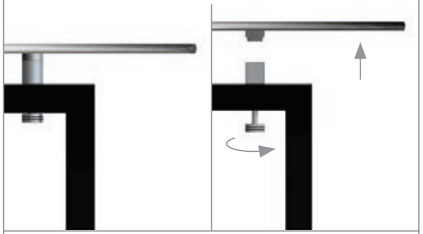

folding-system

Item No.: 99102
Trolley for 10 x cocktail table_SET_70

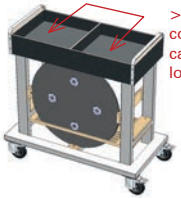

weight: 35 kg [empty] / 221 kg [full]

SET_65 | compact laminate

Item No.: 23004
[LxWxH]: 650 x 650 x 1050 mm
weight: 14,6 kg

Base
steel, powder-coated
profile 30 x 30 mm, can be folded
weight: 7 kg

Table-top
safety glass 10 mm, 650 x 650 mm,
to be fixed to the base,
weight: 10 kg

Lower-tray
compact laminate 10 mm,
425 x 425 mm,
weight: 1,5 kg

The table top has a size of 650 x 650 mm to ensure the stability of the cocktail table.

MATERIAL+COLOR

basic
base: 100,101
table-top: 465, 466
lower-tray: 465, 466

option
all available colors in chapter
MATERIAL+COLOR

This special trolley is necessary for SET_65 with lower-tray in material compact laminate.

connection between table-top and base

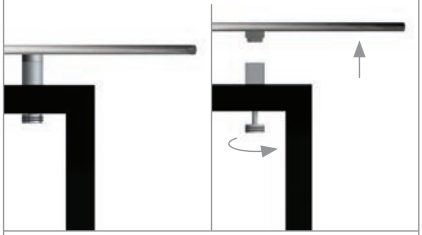

folding-system

Item No.: 99104
Trolley for 10 x cocktail table_SET_65

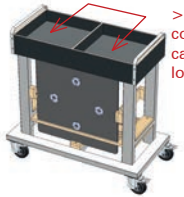

weight: 35 kg [empty] / 221 kg [full]

LED Frame

illuminate your cocktail table

available for 110V and 230V

SET_70_LED

Item No.: 23007
[LxWxH]: 700 x 700 x 1050 mm
weight: 20 kg

Base
steel, powder-coated
profile 30 x 30 mm, can be folded
weight: 7 kg

Table-top
safety glass 10 mm, ø = 700 mm,
white glass-top
to be fixed to the base,
weight: 10 kg

LED frame
steel, 1 mm, powder-coated
anthracite, white acrylic glass,
weight: 1,5 kg

Individual
other frame colors on request

illuminate your table in any color

remote control
to adjust the LED color

MATERIAL+COLOR

basic
base: 100,101
table-top: 300, 465, 466

option
all available colors in chapter
MATERIAL+COLOR

connection between table base and LED-frame

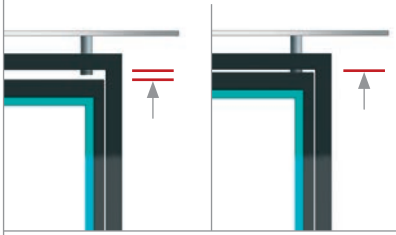

mounting of the LED-frame

folding-system of the SET Table

LED_FRAME_SET

66001
[LxWxH]: 940 x 425 x 30 mm
weight: 5,5 kg

Base
steel, 1 mm, powder-coated

Light frame
white acrylic glass,
30 x 15 mm

Electrical parts
input 100-240V, 50/60Hz,
working voltage 12~24V

available for 110V and 230V

additional LED frame to upgrade your cocktail table

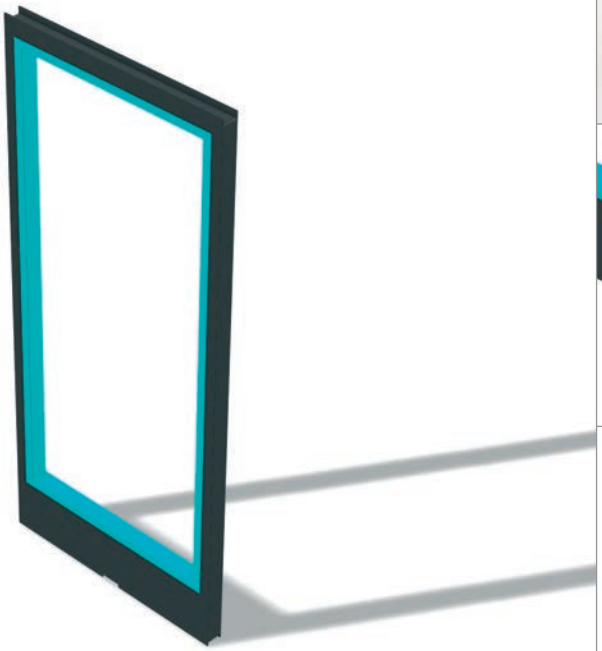

5 hours of light capacity

remote control
to adjust the LED color

charging-system

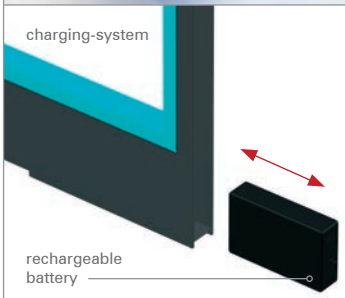

Item No.: 99105
Trolley for 10 x LED frame

weight: 40 kg [empty] / 55 kg [full]

SET_100 | compact laminate

Item No.: 23017
[LxWxH]: 1000 x 1000 x 1050 mm
weight: 24,7 kg

Base
steel, powder-coated
profile 30 x 30 mm, can be folded
weight: 8,8 kg

Table-top
compact laminate 10 mm,
ø = 1000 mm,
to be fixed to the base,
weight: 11,6 kg

Lower-tray
compact laminate 10 mm,
ø = 625 mm,
weight: 4,3 kg

only available in compact laminate

MATERIAL+COLOR

basic
base: 100,101
table-top: 465, 466

option
all available colors in chapter MATERIAL+COLOR

connection between table-top and base

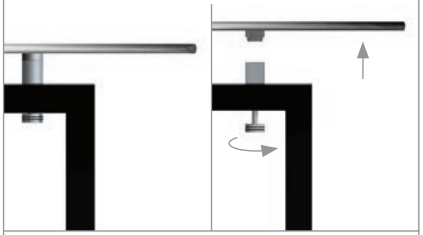

folding system

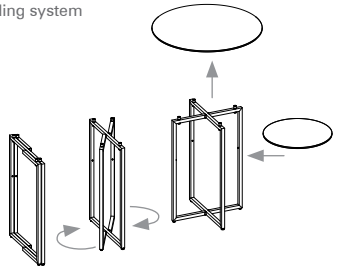

Item No.: 99164
Trolley for max. 5 x cocktail table_SET_100

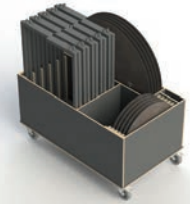

weight: 90 kg [empty] / 213,5 kg [full]

SET_100 | compact laminate

Item No.: 23018
[LxWxH]: 1000 x 1000 x 1050 mm
weight: 20,4 kg

Base
steel, powder-coated
profile 30 x 30 mm, can be folded
weight: 8,8 kg

Table-top
compact laminate 10 mm,
ø = 1000 mm,
to be fixed to the base,
weight: 11,6 kg

only available in compact laminate

No Lower-tray !

MATERIAL+COLOR

basic
base: 100,101
table-top: 465, 466

option
all available colors in chapter MATERIAL+COLOR

connection between table-top and base

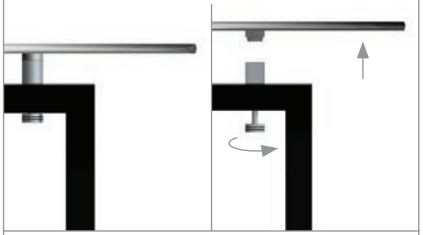

folding system

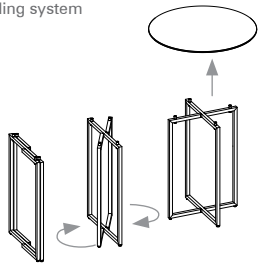

Item No.: 99164
Trolley for max. 5 x cocktail table_SET_100

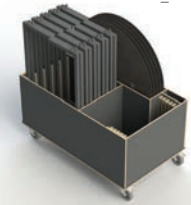

weight: 90 kg [empty] / 192 kg [full]

STAGE_50_L

Item No.: 51002
[LxWxH]: 1960 x 500 x 935 mm
total weight: 32,1 kg

Base
2 x main frame 11,6 kg
2 x table leg 5,0 kg
steel, powder-coated
profile 40 x 40 mm, with height compensation

4 x Castor
diameter = 65 mm
weight: 0,5 kg

Height adjustable:
935 mm (lowest height)
1015, 1095, 1175 mm

Table-top
compact laminate 10 mm
weight: 15,0 kg

Alternative:

Table-top
safety glass 10 mm
weight: 24,0 kg

height can be adjusted (93,5-117,5 cm)

MATERIAL+COLOR

basic
base: 100, 101
table-top: 300, 465, 466

option
all available colors in chapter MATERIAL+COLOR

assembly of individual parts without tools

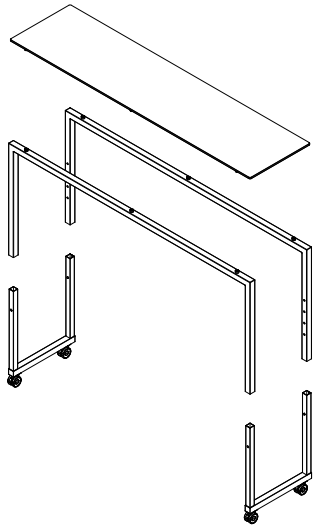

Item No.: 99109
Trolley for 4 x STAGE_50_L (maximum load)

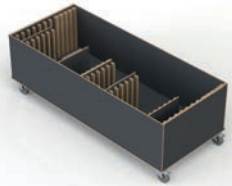

weight: 75 kg [empty] / 203,4 kg [full]

STAGE_50_M

Item No.: 51003
[LxWxH]: 1800 x 500 x 855 mm
total weight: 29,1 kg

Base
2 x main frame 10,6 kg
2 x table leg 5,0 kg
steel, powder-coated
profile 40 x 40 mm, with height compensation

4 x Castor
diameter = 65 mm
weight: 0,5 kg

Height adjustable:
855 mm (lowest height)
935, 1015, 1095 mm

Table-top
compact laminate 10 mm
weight: 13,0 kg

Alternative:

Table-top
safety glass 10 mm
weight: 22,0 kg

height can be adjusted (85,5-109,5 cm)

MATERIAL+COLOR

basic
base: 100, 101
table-top: 300, 465, 466

option
all available colors in chapter MATERIAL+COLOR

assembly of individual parts without tools

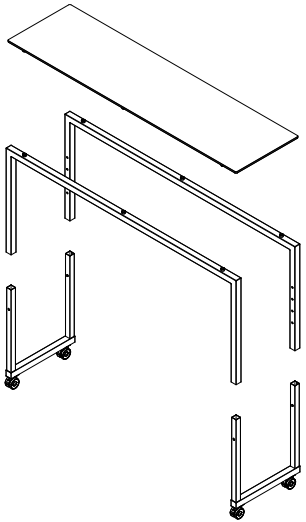

Item No.: 99109
Trolley for 4 x STAGE_80_M (maximum load)

weight: 75 kg [empty] / 191,4 kg [full]

PLATE_37

Item No.: 31001
[LxWxH]: 390 x 410 x 865 mm
seat-height: 765 mm
weight: 4,5 kg

Base
steel, powder-coated
profile 15 x 15 mm
weight: 3,5 kg

Seat
plywood 10 mm, bent, black
weight: 1,0 kg

MATERIAL+COLOR

basic
base: 100,101
seat: 279, 280

option
all available colors in chapter
MATERIAL+COLOR

side view

back view

arrangement (3 x Stool_PLATE_37_WHITE)

Item No.: 99133
Trolley for max. 10 x Stool_PLATE_37

weight: 35.3 lb [empty] / 134.5 lb [full]

BY_45

Item No.: 27004
[LxWxH]: 450 x 450 x 610 mm
weight: 10 kg

Base
steel, powder-coated
profile 30 x 30 mm, can be folded,
frame-measures: 430 x 430 x 560 mm
weight: 5 kg

Table-top
safety glass 10 mm, 450 x 450 mm,
to be fixed to the base,
weight: 5 kg

Individual
other colors on request

Special FEATURE

Table-top as small as the width of the metal frame to fit in the trolley. (inside of the frame)

connection between table-top and base

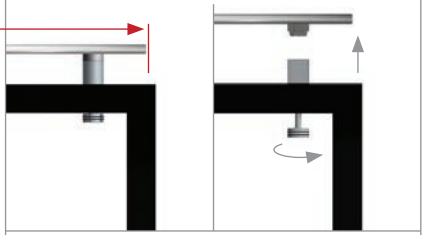

folding-system

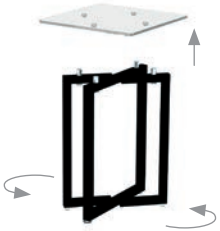

Item No.: 99142
Trolley for 10 x side table_BY_45

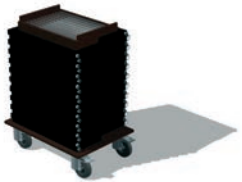

weight: 20 kg [empty] / 120 kg [full]

MATERIAL+COLOR

basic	**option**
base: 100,101 table-top: 300, 465, 466	all available colors in chapter MATERIAL+COLOR

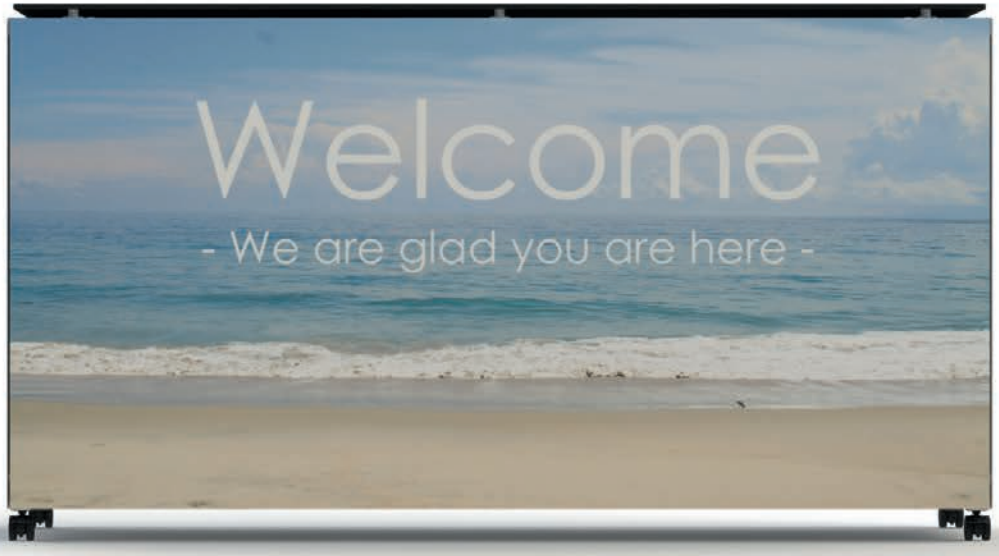
Welcome
- We are glad you are here -

STAGE_50_L_HOSPI_DESK

Item No.: 51030
[LxWxH]: 1960 x 500 x 1095 mm
total weight: 32,1 kg

Base
2 x main frame 11,6 kg
2 x table leg 5,0 kg
steel, powder-coated
profile 40 x 40 mm, with height compensation

4 x Castor
diameter = 65 mm
weight: 0,5 kg

Height with BLINDS:
1095 mm (fix)

Table-top
compact laminate 10 mm
weight: 15,0 kg

1 x FRONTBLIND_STAGE_L_108
Item No.: 38050
[LxWxH]: 1960 x 982 x 17 mm
weight: 7,8 kg

2 x SIDEBLIND_STAGE_50_108
Item No.: 38056
[LxWxH]: 500 x 982 x 17 mm
weight: 2,0 kg

MATERIAL+COLOR

basic
base: 100,101
table-top: 465, 466
cover: 465, 466

option
all available colors in chapter
MATERIAL+COLOR

surface (compact panel / high pressure laminate) can be used for sticking logos (optional application)

OPTIONAL: SHELF_47

backside view

picture shows decoration items

OPTIONAL: SHELF_LOW

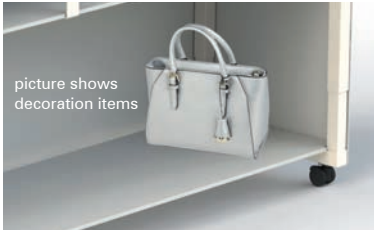

picture shows decoration items

STAGE_50_BACKBAR_160_5

STAGE_50_BACKBAR_160_5

STAGE_50_BACKBAR_160_5
Item No.: 34101
[LxWxH]: 1600 x 500 x 1825 mm
weight: 99,3 kg

metal parts
steel, powder-coated
total weight: 39,8 kg

top and bottom shelf (2 x)
[LxWxH]: 1830 x 500 x 10 mm
weight: 11,8 kg

middle shelf (3 x)
[LxWxH]: 1510 x 310 x 40 mm
weight: 11,8 kg

4 x Castor
diameter = 65 mm
weight: 0,5 kg

MATERIAL+COLOR

basic
base: 100,101
shelf: 465, 466

option
all available colors in chapter
MATERIAL+COLOR

overview of all single parts
assembling by screws

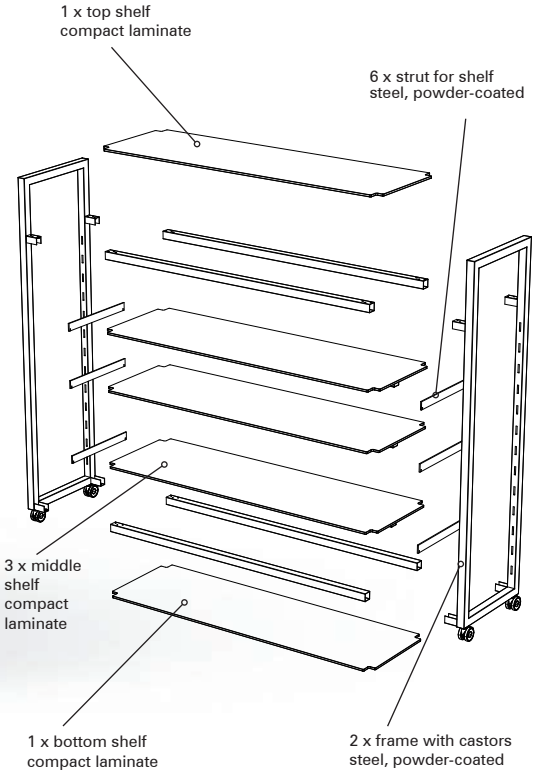

STAGE_50_BACKBAR_160_4

STAGE_50_BACKBAR_160_4

STAGE_50_BACKBAR_160_4
Item No.: 34102
[LxWxH]: 1600 x 500 x 1825 mm
weight: 83,7 kg

metal parts
steel, powder-coated
total weight: 39,5 kg

top and bottom shelf (2 x)
[LxWxH]: 1590 x 500 x 12 mm
weight: 11,8 kg

middle shelf (2 x)
[LxWxH]: 1590 x 500 x 12 mm
weight: 11,8 kg

4 x Castor
diameter = 65 mm
weight: 0,5 kg

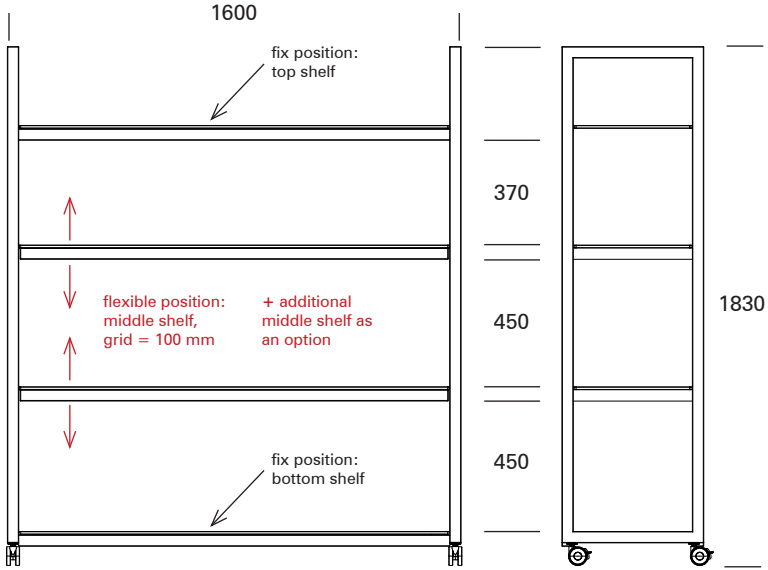

MATERIAL+COLOR

basic
base: 100,101
shelf: 465, 466

option
all available colors in chapter
MATERIAL+COLOR

+ additional shelf option

SHELF_MIDDLE_STAGE_50_BACKBAR_160
Item No.: 50053
[LxWxH]: 1590 x 500 x 50 mm
weight: 15,6 kg

metal parts
steel, powder-coated
total weight: 3,8 kg

middle shelf
[LxWxH]: 1590 x 500 x 12 mm,
material: compact laminate
weight: 11,8 kg

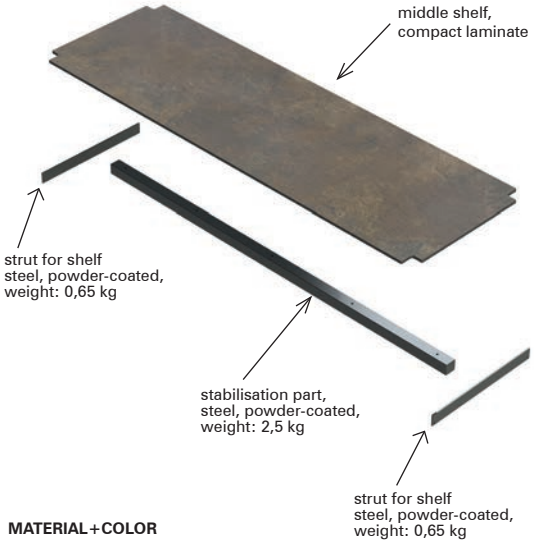

MATERIAL+COLOR

basic
metal parts: 100,101
shelf: 465, 466

option
all available colors in chapter
MATERIAL+COLOR

SIDEBLIND_STAGE_50_BACKBAR_160

Item No.: 38117
L: 500 x 1752 x 13 mm
total weight: 3,6 kg

Sideblind
compact panel, 3 mm

Metal part
steel, powder-coated
bended steel

Connecting part
magnet d = 20 mm glued on the sideblind

SIDEBLINDS are available in all decor options (MATERIAL+COLOR)

MATERIAL+COLOR

basic
base: 100, 101
sideblind: 465, 466

option
all available colors in chapter MATERIAL+COLOR

mounting the SIDEBLIND at the BACKBAR

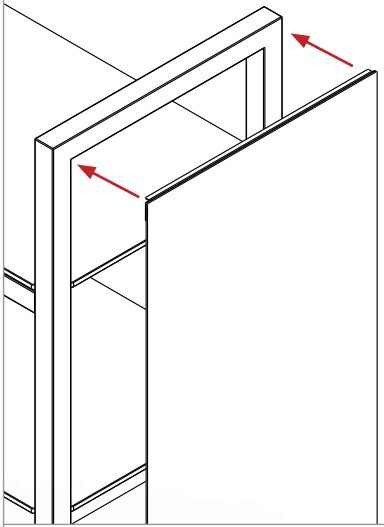

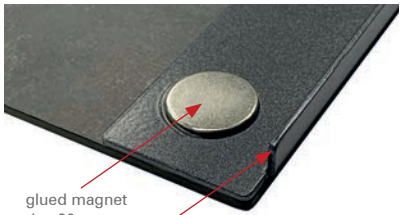

glued magnet
d = 20 mm

long hook (glued on the compact laminate panel)

SIDEBLIND_STAGE_50_BACKBAR_160_STRIPES_COVERED

Item No.: 38115
L: 500 x 1752 x 17 mm
total weight: 8,2 kg

Sideblind
steel, laser-cut decor „STRIPES“, powder-coated

Cover
polyester, decotex, color: white translucent (620)

Connecting part
magnet d = 15 mm glued on the sideblind

backside cover only available in color: 620, 621

MATERIAL+COLOR

basic
base: 100, 101
cover: 620, 621

option
all available colors in chapter MATERIAL+COLOR

mounting the SIDEBLIND at the BACKBAR

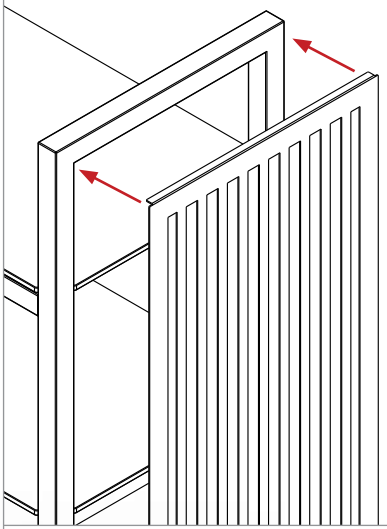

STAGE_80_S_ELEMENTS_BAR

The Mobile Bar – a design experience, with an exclusive, modern design, flexibility and versatility.

The STAGE system can also be used as a mobile bar. For this purpose, the STAGE_80_S table is equipped with one or two table frames from the ELEMENTS series.

One or two ice wells can be inserted into these ELEMENTS table frames. These ice wells are in turn covered with insert plates or lids. A standard table top in the size STAGE_80_XS can also be used instead of the ELEMENTS table frame. The table is then covered with a front panel and two side panels.

The top box is placed on the table surface as a privacy screen and for placing glasses. Alternatively, a STAGE_50_M table can be placed in front of it.

STAGE_80_S_ELEMENTS_2_BAR_1

Item No.: 20142
[LxWxH]: 1600 x 800 x 935 mm
total weight: 46,6 kg

Base
2 x main frame 9,0 kg
2 x table leg 6,2 kg
steel, powder-coated
profile 40 x 40 mm, with height compensation

Table frame ELEMENTS
[LxWxH]: 800 x 800 x 66 mm
total weight: 7,7 kg

Table-top
compact laminate 10 mm
weight: 8,8 kg

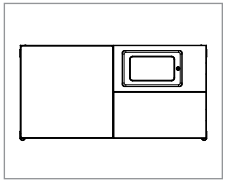

optional position
90° rotated frame

exploded view / all individual parts

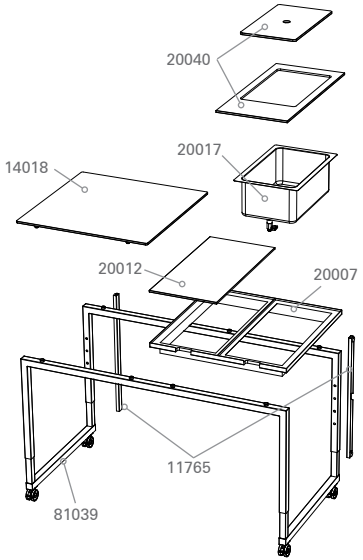

11765 / magnetic_cable_duct_770mm
14018 / table-top_STAGE_80_XS
20007 / table-frame_STAGE_80_XS
20012 / COMPACT_TOP_ELEMENTS
20017 / ICE_WELL_ELEMENTS
20040 / COMPACT_TOP_ELEMENTS_ICE_WELL
81039 / base_STAGE_80_S

MATERIAL+COLOR

basic
base: 100, 101
metal parts: 199
table-top: 465, 466

option
all available colors in chapter MATERIAL+COLOR

STAGE_80_S_ELEMENTS_2_BAR_1

additional equipment
to complete the bar setup

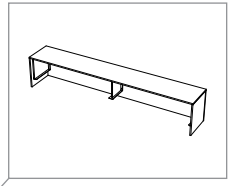

optional equipment
14083 / TOP_BOX

table
on castors

space for equipment
(refrigerator/wastebin)

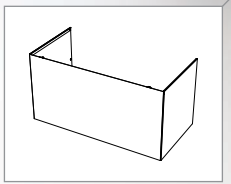

optional equipment
38203 / BLINDS_STAGE_80_S_COMPACT_PANEL

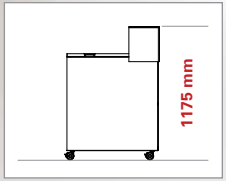

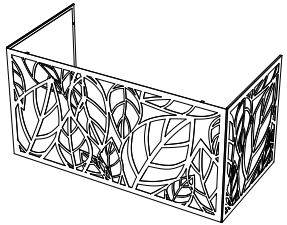

optional equipment
38223 / BLINDS_STAGE_80_S_LEAF_COV.

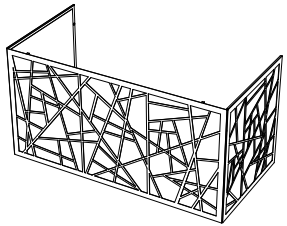

optional equipment
38223 / BLINDS_STAGE_80_S_BAMBOO_COV.

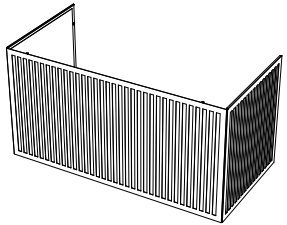

optional equipment
38243 / BLINDS_STAGE_80_S_STRIPES_COV.

STAGE_80_S_ELEMENTS_4_BAR_2

Item No.: 20143
[LxWxH]: 1600 x 800 x 935 mm
total weight: 57,6 kg

Base
2 x main frame 9,0 kg
2 x table leg 6,2 kg
steel, powder-coated
profile 40 x 40 mm, with height compensation

Table frame ELEMENTS
[LxWxH]: 800 x 800 x 66 mm
total weight: 2 x 7,7 kg

COMPACT TOP ELEMENTS (20012)
compact laminate 10 mm
weight: 2 x 4,5 kg

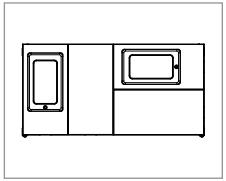

optional position
90° rotated frame

exploded view / all individual parts

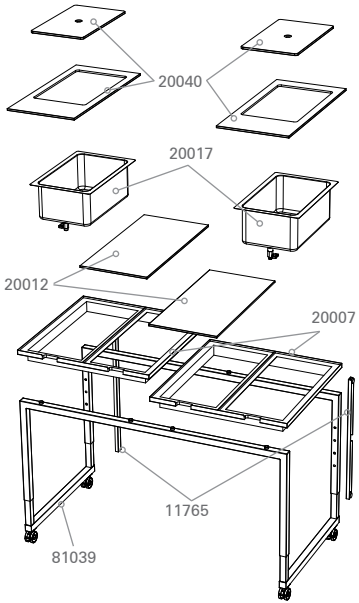

MATERIAL+COLOR

basic
base: 100, 101
metal parts: 199
table-top: 465, 466

option
all available colors in chapter MATERIAL+COLOR

11765 / magnetic_cable_duct_770mm
20007 / table-frame_STAGE_80_XS
20012 / COMPACT_TOP_ELEMENTS
20017 / ICE_WELL_ELEMENTS
20040 / COMPACT_TOP_ELEMENTS_ICE_WELL
81039 / base_STAGE_80_S

STAGE_80_S_ELEMENTS_4_BAR_2

additional equipment
to complete the bar setup

optional equipment
51003 / STAGE_50_M

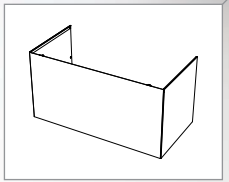

optional equipment
38203 / BLINDS_STAGE_80_S_COMPACT_PANEL

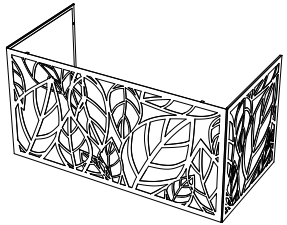

optional equipment
38223 / BLINDS_STAGE_80_S_LEAF_COV.

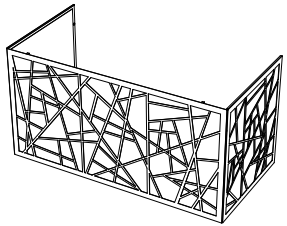

optional equipment
38223 / BLINDS_STAGE_80_S_BAMBOO_COV.

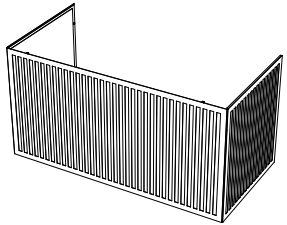

optional equipment
38223 / BLINDS_STAGE_80_S_STRIPES_COV.

ELEMENTS BAR | additional equipment

optional equipment
Cutting_board+insert_1_1_GN (12354)

optional equipment
SPEEDRAIL_30 (66107)

ELEMENTS BAR | additional equipment

1_1_GN_ingredients_container
Item No.: 12353
[LxWxH]: 545 x 345 x 250 mm
total weight: 5,3 kg

1 x built-in chafing-dish with lift-off lid, 2 x GN 1/2 support bar 325mm_APS, 3 x container stainless steel 1/9 100_RIEBER, 2 x container stainless steel 1/6 100 RIEBER, 1 x container stainless steel 1/3 100 RIEBER

optional space for storage
SHELF_47_STAGE_80_XS (80087)

MOBILE_BAR | IMPRESSIONS

photo credit „F. Anthea Schaap/@antheaschaap“

SPEEDRAIL_30

Item No.: 66107199100
[LxWxH]: 307 x 150 x 220 mm
total weight: 1,5 kg

Metal parts
stainless steel, brushed surface

Base
steel, powder-coated

mounting the SPEEDRAIL_30 at the frame of a STAGE_80_XS table

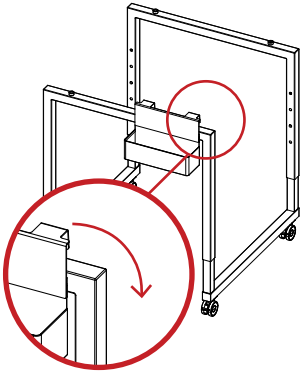

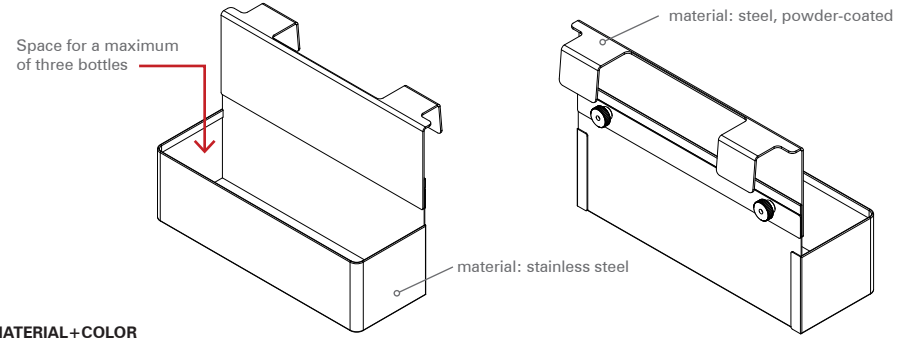

MATERIAL+COLOR

basic	**option**
metal parts: 199 base: 100, 101	all available colors in chapter MATERIAL+COLOR

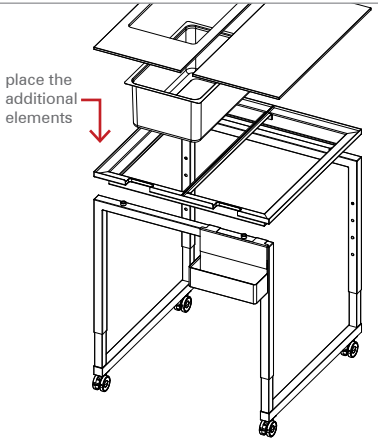

Service Furniture

Coffee Station | Cupboard | Rack

WMF 1500 S

STAGE_80_COFFEE_STATION_SQ

Item No.: 81017
[LxWxH]: 800 x 800 x 935 mm
weight: 70,0 kg

Base
steel, powder-coated
profile 40 x 40 mm, castors
diameter = 75 mm (all with brake)

Table-top
compact laminate 10 mm, with one hole for disposal of coffee dregs

Designed for WMF coffee machine (1500S+ and 5000S+), but can be customized also for other brands.

only available on castors diameter = 75 mm

setup 1 (standard)

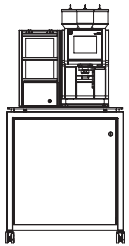

setup 2

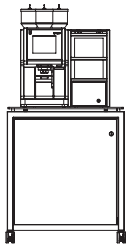

MATERIAL+COLOR

basic
base: 100, 101
cupboard: 201, 202
table-top: 465, 466

option
all available colors in chapter MATERIAL+COLOR

STAGE_80_COFFEE_STATION_RE

Item No.: 81018
[LxWxH]: 1200 x 800 x 935 mm
weight: 80,0 kg

Base
steel, powder-coated
profile 40 x 40 mm, castors
diameter = 75 mm (all with brake)

Table-Top
compact laminate, 10 mm, with one hole for disposal of coffee dregs

Cupboard
melamine faced, chipboard 19 mm, two doors which can be locked

Designed for WMF coffee machine (1500S+ and 5000S+), but can be customized also for other brands.

MATERIAL+COLOR

basic
base: 100,101
cupboard: 201, 202
table-top: 465, 466

option
all available colors in chapter MATERIAL+COLOR

only available on castors diameter = 75 mm

setup 1 (standard)

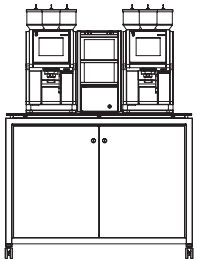

setup 2

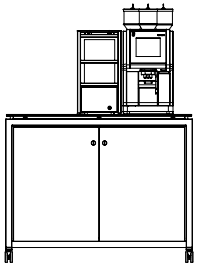

setup 3

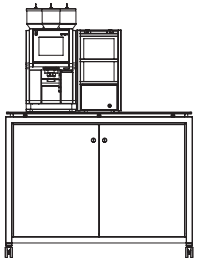

STAGE_80_CUPBOARD_SQ

Item No.: 81043
[LxWxH]: 800 x 800 x 935 mm
weight: 70,0 kg

Base
steel, powder-coated
profile 40 x 40 mm, castors
diameter = 75 mm (all with brake)

Table-top
compact laminate, 10 mm
weight: 8,8 kg

Cupboard
melamine faced, chipboard 19 mm,
one door which can be locked

The cupboard has two shelves inside. The height of the shelves is adjustable. One door can be locked.

Please define the door stop side when you place an order (where the hinges should be fixed).

only available on castors diameter = 75 mm

MATERIAL+COLOR

basic
base: 100, 101
cupboard: 201, 202
table-top: 465, 466

option
all available colors in chapter
MATERIAL+COLOR

top view
hinge side has to be defined

Standard
hinge left side

two adjustable shelfs inside

Alternative / Table-top
safety glass 10 mm, underside black colored (307)

STAGE_80_CUPBOARD_RE

Item No.: 81082
[LxWxH]: 1200 x 800 x 935 mm
weight: 80 kg

Base
steel, powder-coated
profile 40 x 40 mm, castors
diameter=75 mm (all with brake)

Table-top
compact panel, 10 mm
weight: 10 kg

Cupboard
melamine faced, chipboard 19 mm,
two doors which can be locked

Alternative / Table-top
safety glass 10 mm, underside black colored (307), weight: 23,0 kg

only available on castors diameter = 75 mm

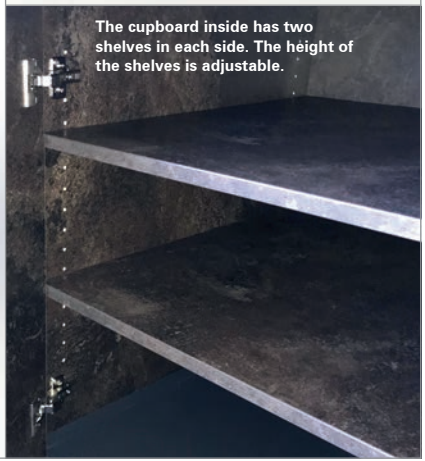

The cupboard inside has two shelves in each side. The height of the shelves is adjustable.

MATERIAL+COLOR

basic
base: 100,101
cupboard: 201, 202
table-top: 465, 466

option
all available colors in chapter
MATERIAL+COLOR

STAGE_80_XS_RACK

STAGE_80_XS_RACK
Item No.: 81088
[LxWxH]: 800 x 800 x 935 mm
weight: 109,7 kg

Rack
chipboard with ABS edge
material thickness: 38 mm

Table-top
Item No.: 14018
compact laminate 10 mm
weight: 8,8 kg

Castor (4 pieces)
Item No.: 11716
diameter = 65 mm
weight: 0,5 kg

Alternative:

Table-top
Item No.: 13006
safety glass 10 mm
weight: 15,0 kg

Table-top:
compact panel

rack:
chipboard

SPECIAL FEATURES:

Magnetic „WOOD“
It is possible to close the rack with the VENTA SIDEBLIND_80.

Frontside with three compartments / backside with two compartments.

81088 / side with three compartments

81088 / side with two compartments

MATERIAL+COLOR

basic
rack: 201, 202
table-top: 465, 466

option
all available colors in chapter MATERIAL+COLOR

RACK

The RACK in the dimension 50 x 80 cm is a perfect addition to the existing STAGE system. All plates, bowls, glasses and cutlery required at the buffet can be perfectly accommodated here.

The RACK has fixed shelves which are separated from each other by a central wall.
On one side there is only one shelf in the middle, while on the other side are two fixed shelves. Depending on the required height of use, the customer selects the suitable side. The open sides can be closed by VENTA Standard SIDEBLINDS so that the contents disappear behind them. The shelf walls are equipped with magnets so that the SIDEBLINDS can be attached to them.

The shelving system is available for a buffet depth of 80 cm in widths of 50 and 80 cm.

STAGE_80_XS_50_RACK

STAGE_80_XS_50_RACK
Item No.: 81089
[LxWxH]: 500 x 800 x 935 mm
weight: 66,6 kg

Rack
chipboard with ABS edge
material thickness: 38 mm

Table-top
compact laminate 10 mm,
weight: 8,8 kg

Castor
diameter = 65 mm
weight: 0,5 kg

Alternative:

Table-top
safety glass 10 mm

Table-top:
compact panel

rack:
chipboard

SPECIAL FEATURES:

Magnetic „WOOD“
It is possible to close the rack with the VENTA SIDEBLIND_50.

Frontside with three compartments / backside with two compartments.

81089 / side with three compartments

81089 / side with two compartments

MATERIAL+COLOR

basic
rack: 201, 202
table-top: 465, 466

option
all available colors in chapter
MATERIAL+COLOR

Equipment

Heavy Load Strut | Cable Duct | Rollerskate | Silicone Pads | Cables

VENTA
BY BÜCHIN DESIGN

HEAVY_LOAD_STRUT_STAGE

HEAVY_LOAD_STRUT_STAGE_80_V3

Item No.: 15066
[LxWxH]: 750 x 40 x 37 mm
weight: 0,75 kg

Material
steel, profile 15 x 15 mm + 3 mm
bended steel, powder-coated
anthracite

HEAVY_LOAD_STRUT_STAGE_50_V3

Item No.: 15068
[LxWxH]: 450 x 40 x 37 mm
weight: 0,35 kg

Material
steel, profile 15 x 15 mm + 3 mm
bended steel, powder-coated
anthracite

additional item to place heavy equipment on the STAGE tables

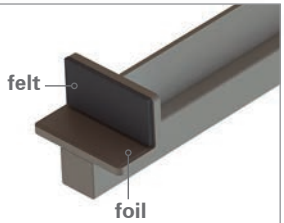

underside view

MATERIAL+COLOR

basic
base: 100, 101

option
all available colors in chapter MATERIAL+COLOR

15066 - for all STAGE_80 tables

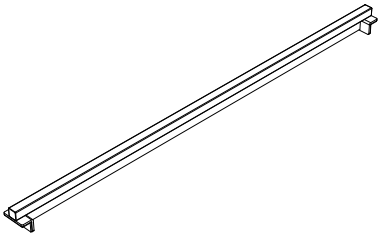

15068 - for all STAGE_50 tables

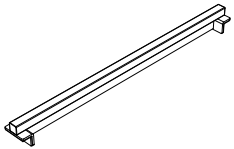

HEAVY_LOAD_STRUT_STAGE

Use the additional strut in case of placing heavy equipment such as coffee machines, ham slicing machines or any other heavy equipment.
The recommended quantity of struts depends on the weight and the dimension of the items placed on the table.

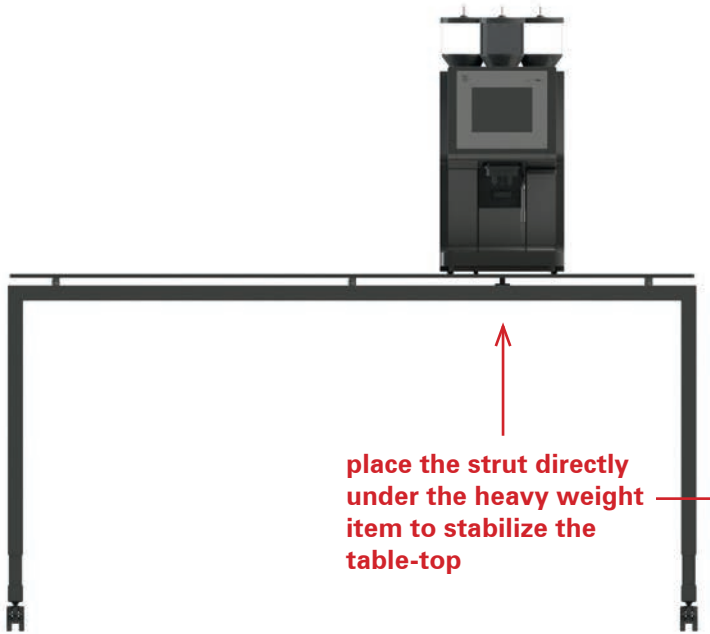

CABLE_DUCT

Item No.: 11765
[LxWxH]: 770 x 35 x 21 mm
weight: 0,965 kg

Material
steel, 1 mm, bended, powder-coated anthracite

Item No.: 11766
[LxWxH]: 610 x 35 x 21 mm
weight: 0,85 kg

Material
steel, 1 mm, bended, powder-coated anthracite

Item No.: 11767
[LxWxH]: 400 x 35 x 21 mm
weight: 0,75 kg

Material
steel, 1 mm, bended, powder-coated anthracite

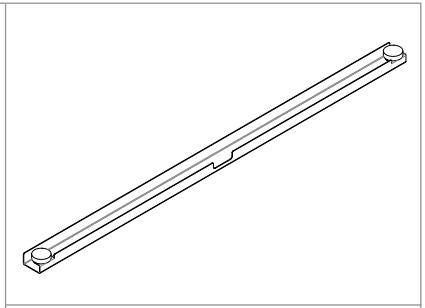

additional equipment to hide the cable

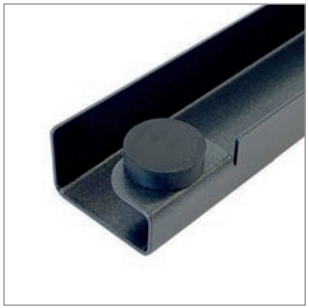

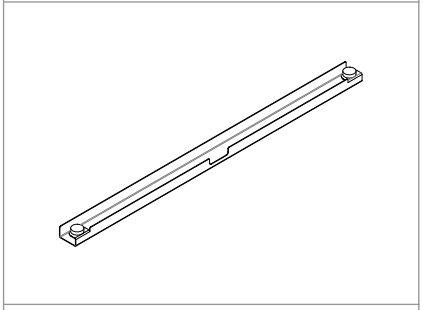

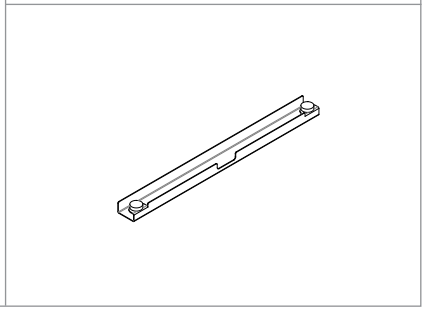

MATERIAL+COLOR

basic
base: 100, 101

option
all available colors in chapter MATERIAL+COLOR

ROLLERSKATE_QUADRO

Item No.: 66007
[LxWxH]: 600 x 600 x 98 mm
weight: 2,4 kg

Material
steel, 2,5 mm, bended, powder-coated
anthracite

Item No.: 66017
[LxWxH]: 600 x 600 x 113 mm
weight: 2,5 kg

Material
steel, 2,5 mm, bended, powder-coated
anthracite

Item No.: 66018
[LxWxH]: 600 x 600 x 123 mm
weight: 2,8 kg

Material
steel, 2,5 mm, bended, powder-coated
anthracite

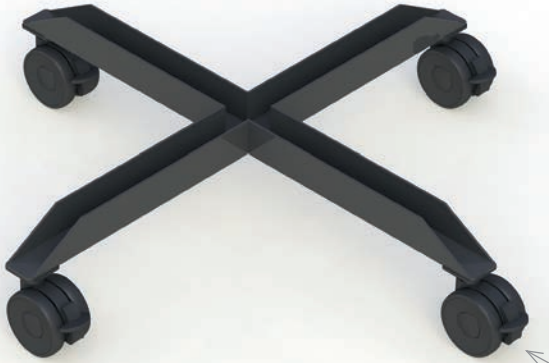

additional equipment to move the table

castor
Ø = 50 mm

MATERIAL+COLOR

basic	**option**
base: 100, 101	all available colors in chapter MATERIAL+COLOR

SILICONE PAD

Item No.: 66008
[LxWxH]: Ø = 150 mm, height = 3 mm
weight: 0,035 kg
material: silicone, black

Item No.: 66030
[LxWxH]: Ø = 200 mm, height = 4,5 mm
weight: 0,079 kg
material: silicone, black

Item No.: 66037
[LxWxH]: 315 x 168 mm, height = 5 mm
weight: 0,184 kg
material: silicone, black

equipment for glass-top tables and induction tables

INDUCTION TABLE WITH CHAFING-DISH

The use of silicone pads under the CHAFING-DISH is mandatory.
In case of disregard you loose every warranty.

MAGNETIC PLUGBAR 400V (three phase)

Item No.: 11162
[LxWxH]: 490 x 43 x 52 mm
weight: 1,7 kg

plugbar for 6 x EU safety plugs (type F, 230V~50Hz)
cable: 5,0 m, H07RN-F 5G1,5 sw, metal housing, color: black
plug: CEE 16A 400V, rated current, maximum power: 3 x 16A / 3600 W
the housing is equipped with two magnets so that it can be attached anywhere on the table frame (steel)

only available for 400V

PLUGBAR 230V (UK plug / overvoltage protetion)

Item No.: 11163
[LxWxH]: 490 x 43 x 52 mm
weight: 1,5 kg

plugbar with overvoltage protection
(6.5kA + mains and frequency filter for 2 x EU safety plug (type F, 230V~50Hz)
cable: 5,0 m, H07RN-F 3G1,50mm², plastic housing, color: black
plug: UK 13A 230V, rated current, maximum power: 1 x 13A / 3200 W,
the housing is equipped with two magnets so that it can be attached anywhere on the table frame (steel)

only available for 230V

MAGNETIC PLUGBAR

Item No.: 11060
cable length: 5 m / plug type: F (EU)
weight: 1,0 kg

EXTENSION CABLES

Item No.: 11064
cable length: 5 m / plug type: F (EU)
weight: 0,6 kg

only available for 230V

Item No.: 11061
cable length:
5 m / plug type:
G (UK)
weight: 1,0 kg

Item No.: 11062
cable length:
5 m / plug type:
J (CH)
weight: 1,0 kg

Item No.: 11065
cable length:
5 m / plug type:
G (UK)
weight: 0,6 kg

Item No.: 11065
cable length:
5 m / plug type:
J (CH)
weight: 0,6 kg

CASTORS (spare parts)

Item No.: 11715
[LxWxH]: 50 x 47 x 66 mm / diameter = 50 mm, weight: 0,1 kg, material: housing polyamide, wheels: polyurethane

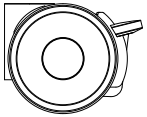

Item No.: 11716
[LxWxH]: 80 x 45 x 65 mm / diameter = 65 mm, weight: 0,125 kg, material: housing polyamide, wheels: polyurethane

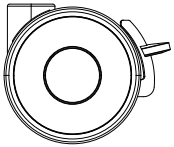

Item No.: 11741
[LxWxH]: 95 x 55 x 75 mm / diameter = 75 mm, weight: 0,2 kg, material: housing polyamide, wheels: polyurethane

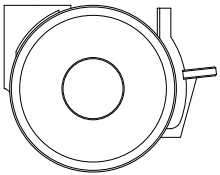

PROTECTIVE_COVER_STAGE

Item No.: 78010666
[LxWxH]: 820 x 520 x 850 mm
weight: 2,5 kg

Features
protective cover for assembled VENTA buffet tables
material: plastic fabric, inside padded with 10 mm foam and lined with nylon (110D)
2 x zipper on one narrow side
clear pocket in size DIN A4 for inserting information sheets

additional equipment to protect the tables

available for all STAGE tables (80/50)

INDOOR USE
material: polyester
inside padded with 10 mm foam
VENTA-CODE: **666**

OUTDOOR USE
material: polyester swela outguard
waterproof, lightweight and foldable
VENTA-CODE: **668**

illumination by LED panels

This is the additional LED equipment for your buffet-table to create a unique and comfortable atmosphere for your guests.

Additionally you need only the VENTA decor blinds and the Shelf_Low to place the lights onto.

LED_PANEL | SQ + RE

Item No.: 66033
[LxWxH]: 625 x 625 x 54 mm
weight: 4,2 kg

LED_PANEL_SQ
suitable for all STAGE_80 tables

only available for 230V

Item No.: 66034
[LxWxH]: 600 x 300 x 54 mm
weight: 4,0 kg

LED_PANEL_RE
suitable for all STAGE_50 tables

Features

LED surface light for illuminating STAGE tables with BLINDS (COVER: Decotex, white, translucent)
model number: RGB+CCT-36W, DC 24V, input: 100-240V, features: RGB mode, colour adjustable 2700-6500K, brightness dimmable, supplied with remote control

Available with various plug options:
EU / UK / CH

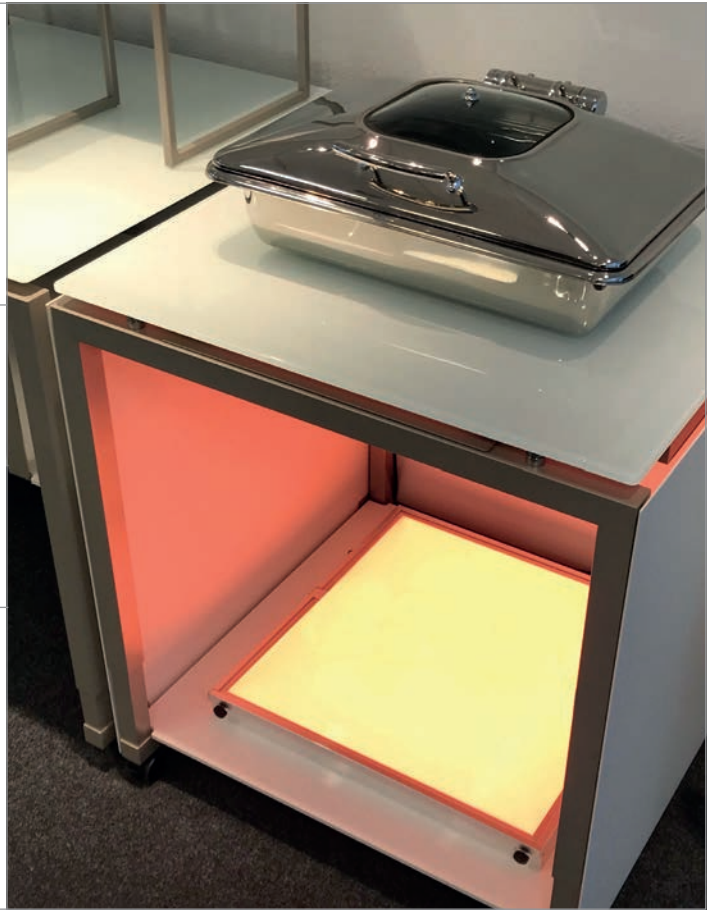

Lectern

exchangeable front display

LECTERN_3G

Item No.: 35001
[LxWxH]: 500 x 600 x 1200 mm
weight: 30 kg

Body
acrylic glass, color: anthracite

Front-board
acrylic glass, transparent,
600 x 1090 mm

Base
metal plate, 2 mm,
color: anthracite, powder-coated

only available for 230V

delivery version:
black front cover
(exchangeable)

Features:
exchangeable front for printings
LED reading lamp
preparation for microphone
soft cover for transport and storage
rollerskate

all electrical properties use standard
power supply of 230V/50Hz
plug: schuko (CEE 7/4)

front view

height: 120 cm

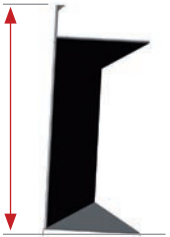

cable inlet under
the metal plate

Features

All VENTA furniture has special features that make our exclusive products distinctive and unique. Each individual product was designed as a foldable, stackable or modular system, so our high-quality furniture can always be securely stored, taking up very little space.

A matching trolley system is available for all VENTA furniture items, where the table parts can be stacked individually and secured in place against one another.

All VENTA furniture is put together without the use of any tools and there are no parts that can get lost. The connecting elements between the table frame and table-top are always made of stainless steel and are produced using high-precision lathes. The consistent quality of our products is ensured through regular physical controls.

VENTA products are designed as foldable, stackable or modular systems, enabling our furniture to be stored securely and using very little space. We also offer additional equipment for many VENTA products to make them even more simple and convenient to manage. All foldable tables can be equipped with rollerskates, for example. This enables the buffet tables to be moved around the room quickly and easily without having to carry them or take them apart and put them together again.

Features of VENTA products

feet-adjustment

The cocktail tables have three feet which are fixed. The fourth foot is adjustable. You can use your own foot to adjust easily the stability.

glass-top mounting

The cocktail tables and most of the buffet tables have a special feature to fix the glass-top to the base. The screw is mounted undetachable on the base.

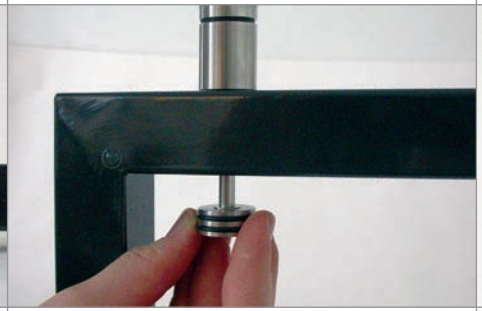

glass-top quality

All glass-tops are produced as safety glass. In case of damage, they will break into small pieces to avoid any injury.

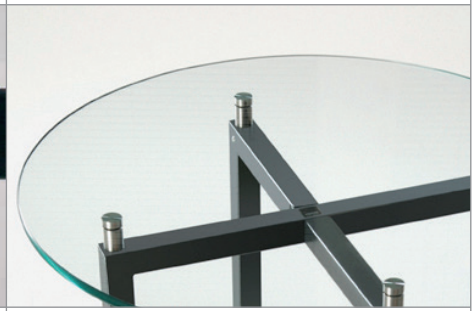

trolleys for storage

For almost all VENTA products we offer trolleys to store the goods. You can store ten cocktail tables in a trolley in less than 0,6m².

foldable furniture

Nearly all VENTA products are foldable.

stackable furniture

The stools can be stacked up to ten pieces.

Material + Color

BASIC and OPTION

Büchin Design offers a wide range of materials and colors in two categories BASIC and OPTION.
The category LUXURY is only available for gold and silver colored glass tops.

All VENTA items have a unique five-digit item number.

example: 23001 for the table model SET_70
To define the material + color of the model, just add the three-digit material code.
example: 23001 + 100 (base frame = anthracite) + 300 (table-top = glass, transparent) + 300 (lower-tray = glass, transparent).

table-top:
glass, transparent

BASIC
23001100300300

table-top:
glass, white colored

OPTION
23001100303303

table-top:
glass, gold colored

LUXURY
23001100318318

Metal | color options

BASIC | 2 colors

100 | anthracite

101 | champagne

OPTION | 13 colors

102 | brown

103 | golden yellow

104 | black

105 | white

106 | gold

107 | dark brown

108 | black brown

109 | platinum grey

110 | bronze brown

111 | white aluminium

112 | young bronze

113 | copper

117 | dark bronze

Additional Colors | select your color from IGP-range (number 58 / color code: IGP DURA face/pearl mica effect)

The images of the colors are similar but not binding.

Glass | color options

BASIC | only transparent glass (floatglass)

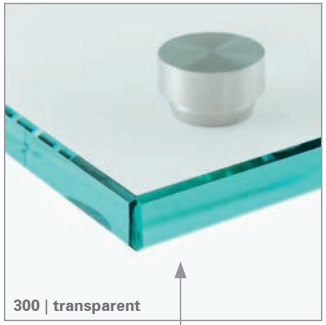

300 | transparent

OPTION | 7 colors

303 | white

307 | black

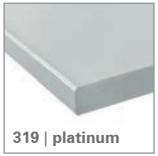

319 | platinum

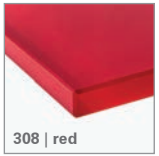

308 | red

309 | yellow

310 | green

311 | purple

OPTION | choose any RAL color you like

LUXURY | two special metal colors

317 | silver

318 | gold

The images of the colors are similar but not binding.

Compact panel | decor (BASIC)

BASIC | table-top, lower-tray, shelf

blinds in 3 mm (all with black core)

Fano Pine White	Terrazzo Bronze	decor name	Icy White
465	466	color-code	467

Chipboard | decor (BASIC)

BASIC | coffee station, cupboard, rack

Fano Pine White	Terrazzo Bronze
201	202

melamine-faced chipboard, 19 mm, decor similar to HPL Terrazzo Bronze (202)

table-top material: compact panel, 10 mm (black core) Terrazzo Bronze (466)

cupboard / coffee station / rack

The images of the colors are similar but not binding.

Compact panel & Chipboard | decor (OPTION)

Carrara Marble 425 217	Grey Sonoma Oak 459 221	Ferro Black 462 218	Icy White 467 NEW 200	Botticino 468 NEW 203	India White 469 NEW 204	Caviar Silver 470 NEW 205	Espresso 471 NEW 206
Cava Beige 472 NEW 207	Loftec 473 NEW 208	Tempered Steel 474 NEW 209	Phoenix Brown 475 NEW 210	Bellato Grey 476 NEW 211	Kito Bronze 477 NEW 212	Alux Champagne 478 NEW 214	Standard Walnut 479 NEW 215
Okapi Walnut 480 NEW 273	Portland Ash Black 481 NEW 274	Natural Strada 482 NEW 275	Anthracite Strada 483 NEW 276	Spain Olive Light 484 NEW 282	Caviar Black 485 NEW 283		

400-VENTA code for material compact panel (3 mm and 10 mm)

200-VENTA code for material chipboard (19 mm and 38 mm)

Larger pictures of the decors can be seen in our lookbook MATERIAL + COLOR.

The images of the colors are similar but not binding.

Plywood with HPL | color options

BASIC | 2 decor options

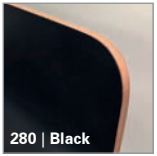

color-code

The images of the colors are similar but not binding.

Polyester | color options

BASIC | decor variations

material name:
DECOTEX

backside: white

material name:
MOON

backside: grey

material name:
MOON, color print

backside: grey

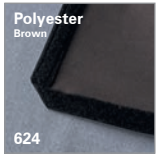

material name:
MOON, color print

backside: grey

The back of the metal cover is covered with polyester fabric.
example: MOON, color print: brown / VENTA-Code: 624

metal part in IGP-color
example: champagne, VENTA-Code: 101

The images of the colors are similar but not binding.

Partner & Reseller

VENTA tables all around the world

VENTA products can be found all around the world in the showrooms of our partners.

We cooperate with other manufacturers of high qualitity hotel equipment like **Frilich** for the breakfast stations and **Zieher** for exclusive tableware.

WMF has showrooms in Birkenfeld and Hamburg that are equiped with VENTA buffet tables.

The **Hotelkompetenzzentrum** in Munich has also a selection of our tables.

Distribution partner who are selling our products worldwide:

Germany / Autenrieb
Switzerland / Cash Hôtel
United Kingdom / Signature FSE
Spain / Álvarez
Hungary / Konyhadoktor Kft
Czech Republic / Design Gastro

Canada / Globe Hotelware
United Arab Emirates / RestofairRAK
Singapore / Andy Mannhart Asia
Qatar / Royal Hospitality
Saudi Arabia / Port Stores
Australia / td innovations

CAFE
NEW

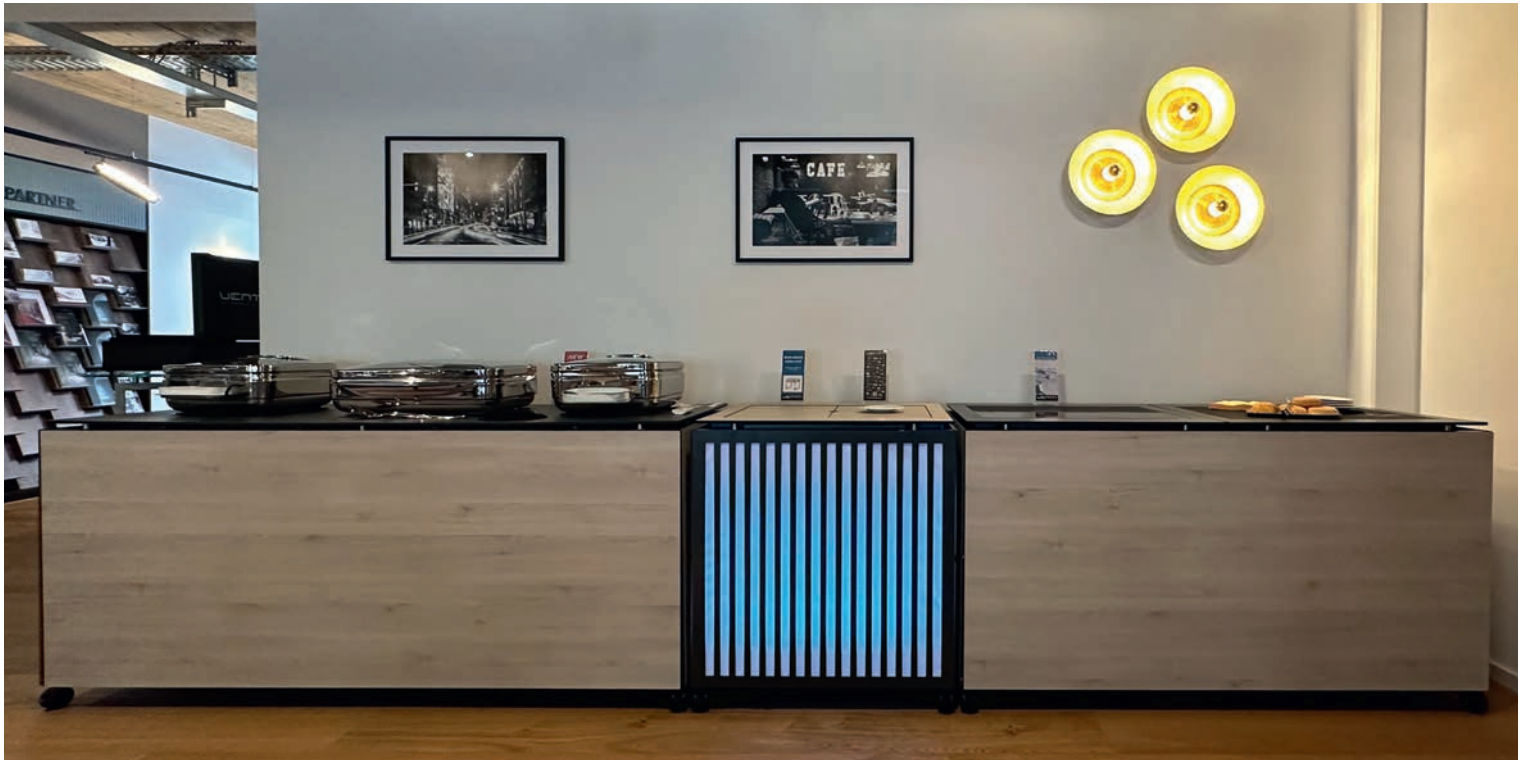

GERMANY | Munich

New equipment installed in June 2023.
STAGE_80_L with 4 x invisible induction and addtional tables with COOL+HOT table-top-units.

Hotelkompetenzzentrum GmbH, Sonnenstraße 19, 85764 Oberschleißheim, GERMANY

GERMANY | Düsseldorf

Full range of VENTA equipment on two floors in a wonderful showroom atmosphere.
Take advantage of many years of experience of the Autenrieb sales team in consulting and sales.

Autenrieb Gastronomy Service International GmbH, Pappelweg 2, 40489 Düsseldorf, GERMANY

Excellence since 1986 - Exclusive Design since 2006

ZIEHER

The brand ZIEHER stands for innovative design in top class restaurants and the innovative gastronomy in over 90 countries.

Products made of different materials such as glass, stainless steel, solid wood, porcelain etc. and their combinations give birth to high-quality, modern tableware and buffet-systems.

This is why ZIEHER is internationally well known by its target audiences (executive floors, suites and lounges) as a modern company with the strength to create innovative products with appealing and emotional design - out of its own ideas.

Skyline

The system allows a maximum of flexibility for the most exclusive buffet presentations. The spectacular look, which is remotely reminiscent of the silhouette of skyscrapers, as well as the extensive functionality, leave nothing to be desired with this unique system.

All Zieher products from the range of buffet, wine & dine can be found at
WWW.ZIEHER.COM

STAGE_80_M/breakfast station

FRILICH

Worldwide | References

VENTA has designed exclusive furniture for the hotel, events and catering industry throughout the world. Our clients are based in a wide range of locations.

You can find all our clients worldwide on our website under references:
https://ventadesign.com/references-world-wide-leading-hotels/

Worldwide | References

7Pines Resort Ibiza, a Destination by Hyatt Hotel
7Pines Resort Sardinia , a Destination by Hyatt Hotel
Aberdeen Exhibition and Conference Centre
Abesq Doha Hotel & Residences
AC Hotel Berlin Humboldthain Park
AC Hotel by Marriott Wuerzburg
AC Hotel Paris Le Bourget Airport
Accenture Innovation Centre London
Accra Marriott Hotel
Address Beach Resort Fujairah
Address Harbor Point – Dubai
Address Sky View
Adina Apartment Hotel Frankfurt Neue Oper
Adina Apartment Hotel Nuremberg
ADNH Compass
Al Baleed Resort Salalah by Anantara
Al Bustan Palace, A Ritz-Carlton Hotel
Al Messila, a Luxury Collection Resort & Spa, Doha
Alcron Hotel Prague
Allianz Deutschland AG
Allianz Forum
Allianz Group Management Institut
Allianz ONE - Business Solutions GmbH
Aloft London Excel
Aloft Palm Jumeirah
Alois Dallmayr KG, Munich
AlRayyan Hotel Doha, Curio Collection by Hilton
Althoff Grandhotel Schloss Bensberg
Ambassadori Hotel
Amsterdam Marriott Hotel
Andaz London Liverpool Street, by Hyatt
Andaz Prague - a Concept by Hyatt
Arbor City Hotel London
ARCOTEL Rubin
Arena Leipzig
Armenia Marriott Hotel Yerevan
ARTE Seminar- und Konferenzhotel
Artizian Catering Limited
Artyzen Singapore
Assila Hotel Rocco Forte
Association of German Pfandbrief Banks
ATLANTIC Hotel Kiel
ATLANTIC Hotel Münster
Austrian Airlines
Aviator Hotel Hampshire
Axica Kongress- und Tagungszentrum
b'mine hotel Düsseldorf
B & N Service AG
Baku Marriott Hotel Boulevard
Banque de France
Banyan Tree Doha At La Cigale Mushaireb
Barceló Castillo Beach Resort
Barceló Raval
BASF, Lounge Terrasse
Bay La Sun Hotel and Marina
Bayer Pharma AG
Bayerische Staatsoper
BCF ARENA
Bel-Air Country Club
BERGSON Kunstkraftwerk München
Berlin Marriott Hotel
Bertelsmann SE & Co. KGaA
Big Marine Hotel
Bistro EssART, Funke Mediengruppe
b'mine hotel Düsseldorf
Bowie House, Auberge Collection
Bozsik Stadion, Budapest Honvéd FC
Breidenbacher Hof, a Capella Hotel
Bristol Marriott Hotel City Centre
Bristol Marriott Royal Hotel
Brussels Marriott Hotel Grand Place
Budapest Marriott Hotel, Hungary
Budda-Bar Hotel Prague
Bulgari Hotel Beijing
Bulgari Hotel Roma
Bulgari Hotel Tokyo
Bundespräsidialamt, Schloss Bellevue
Bürgenstock Resort
Calgary Marriott Downtown Hotel
Camden Court Hotel
Campus Hotel Hertenstein
Canon Deutschland GmbH
Capella Singapore
Carlo IV
CCD, The Convention Centre Dublin
Celtic Manor Resort
Ceuta Puerta de Africa
Cidade de Goa - IHCL SeleQtions
Circle at Paradisus Palma Real
City of Dreams
Club House Rwanda
Cologne Marriott Hotel
COMP-LET Party Service Kft.
Concert Hall „Great Amber"
Conrad Hamburg
Conrad Seoul
Copenhagen Marriott Hotel
Coral Level at Iberostar Selection Cancun
Corinthia Hotel London
Courtyard Amsterdam Airport
Courtyard Berlin City Center
Courtyard Brno
Courtyard Budapest City Center
Courtyard Hamburg City
Courtyard Marriott Batumi
Courtyard Paris Gare de Lyon
Courtyard Paris Roissy Charles de Gaulle Airport Hotel
Courtyard Pilsen
Courtyard Prague City
Courtyard Riyadh Olaya
Courtyard Sarajevo
Courtyard St. Petersburg Vasilievsky
Courtyard Stockholm Kungsholmen
Courtyard Yerevan
Crown Sydney
Crowne Plaza Brussels Airport
Crowne Plaza Copenhagen Towers
Crowne Plaza Dusseldorf - Neuss
Cummins Inc.
Cunard Line
D Maris Bay
D-Resort Šibenik
DAMAC Towers by Paramount Hotels & Resorts Dubai
Danubius Health Spa Resort Margitsziget
dbb forum berlin
DCT Facilities Management
DEINspeisesalon
Delta Hotels Bessborough
Delta Hotels by Marriott City Center Doha
Delta Hotels Calgary Airport In-Terminal
Der Hermannshof (Gästehaus)
Deutsche Lufthansa AG
Deutscher Sparkassen Verlag GmbH
Deutsches Historisches Museum
Disney Adventure
Dods
Doha Marriott Hotel
Dorint Hotel An der Messe Köln
Dorint Maison Messmer Baden-Baden
DORMERO Hotel Berlin Ku'damm
DoubleTree by Hilton Berlin Ku'damm
DoubleTree by Hilton Bratislava
DoubleTree by Hilton Novosibirsk
Dream Cruises, Genting Dream

Worldwide | References

Dubai World Trade Centre
Durango Casino and Resort
Durham Marriott Hotel Royal County
Dusit Doha Hotel
Eagle ski club
Easthampstead Park
Edgbaston Park Hotel
EHL Hospitality Business School
Eichberg
Eldora AG
Empire Riverside Hotel
Enterprise Hotel
ERGO Gourmet, ERGO Group AG
EUREF-Campus Berlin
Fairmont Golden Prague
Fairmont Hotel Vier Jahreszeiten Hamburg
Fairmont Quasar Istanbul
Falkenstein Grand, Königstein
Federal Foreign Office
Fes Marriott Hotel Jnan Palace
FIFA World Football Museum
Fischhaus Hotel am Schaalsee
Flesslers Lenggries, a Tribute Portfolio Hotel
FONTANA Restaurant GmbH
Four Seasons Hotel Abu Dhabi at Al Maryah Island
Four Seasons Hotel Doha
Frankfurt Marriott Hotel
Fraser Suites Doha
Fraunhofer-Forum Berlin
Freudenberg Real Estate GmbH
Fulham Pier Hotel
Gather & Gather
Geneva Marriott Hotel
Genting Dream
German Embassy Kiev
German Embassy Moscow
German Embassy Skopje
Giardino Ascona
Gold Coast Convention and Exhibition Centre
Golf & Sporthotel Wiesensee
Golf- und Land-Club Berlin Wannsee e.V.
Golfhotel Bodensee
Gothal, Liptovská Osada
Grace La Margna St. Moritz
Gran Meliá Palacio de los Duques
Gran Meliá Victoria
Grand Elysée Hamburg
Grand Heritage Doha Hotel
Grand Hotel Bernardin
Grand Hotel Cirta
Grand Hotel Des Bains Kempinski St. Moritz
Grand Hotel Djibloho
Grand Hotel Europe
Grand Hotel Huis ter Duin
Grand Hotel Kempinski Riga
Grand Hotel Savoia
Grand Hyatt Berlin
Grand Hyatt Doha Hotel & Villas
Grand Millennium Muscat
Grand Rostov by Hyatt Regency
Grosvenor House Suites
Grosvenor House, a Luxury Collection Hotel, Dubai
Grosvenor House, JW Marriott Hotel
Gurten Park im Grünen
Gut Brandlhof
Güterbahnhof Neubrandenburg
H10 Berlin Ku'damm
H4 Hotel Berlin Alexanderplatz
Hallenstadion Zürich
Hamad Medical Corporation
Hamburg Marriott Hotel
Hamburg Süd
Hamburger Feuerkasse
HARPA Concert Hall
Hayalet Steak House
HC Fribourg-Gottéron
Heidelberg Marriott Hotel
Henkel AG
Hilton at St. George's Park, Burton upon Trent
Hilton Barcelona
Hilton Brisbane
Hilton Budapest
Hilton Dubai Palm Jumeirah
Hilton Frankfurt Airport
Hilton Garden Inn Mannheim
Hilton Garden Inn Volgograd
Hilton Geneva Hotel and Conference Centre
Hilton Luxor Resort & Spa
Hilton Mainz
Hilton Porto Gaia
Hilton Prague
Hilton Prague Old Town
Hilton Salwa Beach Resort & Villas
Hilton Sofia
Hilton Tallinn Park
Hilton Tangier Al Houara Resort & Spa
Holiday Inn Edmonton S - Ellerslie Road
Holiday Inn Express London - Limehouse
Holiday Inn Leipzig - Günthersdorf
Holiday Inn Lubeck
Holiday Inn Munich – City Centre
Home Les Crêtes
Hotel 47°
Hotel Adlon Kempinski Berlin
Hotel Alfonso XIII, A Luxury Collection Hotel, Sevilla
Hotel am Steinplatz, Autograph Collection
Hotel Arte, Seminar- und Konferenzhotel
Hotel Arts
Hotel Astoria
Hotel Atlantic Hamburg
Hotel Belvoir
Hotel Berlin Central District
Hotel Bristol, a Luxury Collection Hotel, Warsaw
Hotel Camiral, PGA Catalunya Resorts
Hotel Continental
Hotel Crystal
Hôtel des Horlogers
Hôtel du Léman
Hotel Fairmont Riyadh
Hotel Goldenes Rad Ulm
Hotel Hafen Hamburg
Hotel Indigo Milan - Corso Monforte
Hotel Indigo St. Petersburg, Tchaikovskogo
Hotel Kloster Haydau
Hotel Malbork by DeSilva
Hotel Maximilian's
Hotel Meilenstein
Hotel Michaelis
Hotel Neues Pastorat
Hotel NH Berlin City Ost
Hotel NH Collection Prague Carlo IV
Hotel NH Düsseldorf City
Hotel Passage
Hotel RIU Plaza España
Hotel Rosatsch, Pontresina
Hotel Schweizerhof Luzern
Hotel Sedartis
Hotel Sempachersee
Hotel St. Gotthard
Hotel Vier Jahreszeiten Kempinski Munich
Hungexpo, Budapest
Hyatt Centric Gran Via Madrid
Hyatt House Dusseldorf / Andreas Quarter
Hyatt Place Taghazout Bay

Worldwide | References

Hyatt Place Taghazout Bay
Hyatt Regency Casablanca
Hyatt Regency Dar es Salaam, The Kilimanjaro
Hyatt Regency London - The Churchill
Hyatt Regency London Blackfriars
Hyatt Regency Sochi
Hyatt Regency Sofia
Hyatt Regency Zadar
Hyatt Regency Zurich Airport The Circle
Iberostar Dominicana
Iberostar Grand Hotel Bavaro
Iberostar Grand Paraiso
Iberostar Rose Hall Beach
Iberostar Selection Cancún
Imperial Riding School, Autograph Collection
InterContinental Bahrain
InterContinental Berlin
InterContinental Bucharest
InterContinental Doha - The City
InterContinental Dusseldorf
InterContinental Fujairah Resort
InterContinental Ljubljana
InterContinental Muscat
InterContinental San Francisco
InterContinental Tashkent
InterContinental Vienna
InterContinental Wellington
Internationale Stiftung Mozarteum
Irvine Marriott
Istanbul Marriott Hotel Sisli
Johannesburg Marriott Melrose Arch Hotel
JUFA Hotel Hamburg HafenCity
Jumeirah Port Soller Hotel & Spa
JW Marriott Absheron Baku
JW Marriott Bucharest Grand Hotel
JW Marriott Chandigarh
JW Marriott Edmonton Ice District & Residences
JW Marriott Grosvenor House London
JW Marriott Hotel Ankara
JW Marriott Hotel Cairo
JW Marriott Hotel Frankfurt
JW Marriott Hotel Hong Kong
JW Marriott Hotel Singapore South Beach
JW Marriott Hotel Tripoli
JW Marriott Marquis Dubai
JW Marriott parq Vancouver
JW Marriott Venice Resort & Spa
K Hotel Douala
Kameha Suite Frankfurt
Keight Hotel Opatija, Curio Collection by Hilton
Kempinski Hotel Berchtesgaden
Kempinski Hotel Frankfurt Gravenbruch
Kempinski Mall of the Emirates
Kempinski Seychelles Resort Baie Lazare
Kempinski The Boulevard Dubai
Kigali Marriott Hotel
Kimpton Aysla Mallorca
Kings Palace Oman
Klinik Hirslanden AG
Klostergut Paradies
Kongresshaus Zürich
Kongresshotel Potsdam
Krasnodar Marriott Hotel
Kulmhotel St. Moritz
Kultur- und Kongresszentrum Luzern
Kursaal Bern
La Ville Hotel & Suites CITY WALK, Dubai, Autogr. Col.
Lancashire Cricket Club
Lapita, Dubai Parks and Resorts, Autograph Collection
Le Méridien Barcelona
Le Méridien Cairo Airport
Le Méridien Hamburg
Le Méridien München
Le Méridien Piccadilly
Le Méridien Stuttgart
Leipzig Marriott Hotel
Leon's Place
lewisford group
Lindner Hotel & Residence Main Plaza
Lindner Hotel & Sporting Club Wiesensee
Lindner Hotel Am Michel
Lindner Hotel City Plaza
Linklaters LLP
Lombard Odier
London Bridge
London Marriott Hotel Grosvenor Square
London Marriott Hotel Kensington
LondonHouse Chicago, Curio Collection by Hilton
LOOM Coworking Madrid
Ludwig-Erhard-Haus der IHK Berlin
Lufthansa Seeheim GmbH
Lusso Catering
Luxembourg Marriott Hotel Alfa
Macdonald Cardrona Hotel, Golf & Spa
Madinat Jumeirah Resort
Mainova AG
Maison de Retraite du Petit-Saconnex
Majid Al Futtaim
Makkah Marriott Hotel Jabal Omar
Mandarin Orchard Singapore
Mandarin Oriental Barcelona
Mandarin Oriental, Vienna
Mandarin Oriental, Washington D.C.
Marina Bay Sands
Maritim Hotel Düsseldorf
Marriott Bloom Central
Marriott Executive Apartments Addis Ababa
Marriott Hotel Al Forsan, Abu Dhabi
Marsa Malaz Kempinski, The Pearl - Doha
McAllen Country Club
ME Dubai
Me Ibiza
Media One Hotel Dubai
Meliá Alicante
Meliá Barajas
Meliá Barcelona Sarrià
Meliá Bilbao
Meliá Castilla
Meliá Costa del Sol
Meliá Frankfurt City
Meliá Palma Bay
Meliá Sevilla
Meliá Sitges
Meliá Vienna
Mercure Warszawa Grand
Messe Berlin, CityCube Berlin
METZLER, B. Metzler seel. Sohn & Co. Holding AG
Milan Suite Hotel
Milbank
Millennium
Millennium Place Mirdif
Millennium Stadium (Principality Stadium)
Miranda de Pedralbes
Mishcon de Reya
Mohammed VI Polytechnic University
Mohammed V-University
Moment Cuisine
Mondrian Doha Hotel
Moor House, London Wall
Mövenpick Hotel Amsterdam City Centre
Mövenpick Hotel Basel
Mövenpick Hotel Doha
MOXY Vienna Airport
Müller-Zeiner Industrieverpackungen GmbH

Worldwide | References

Munich Marriott Hotel
Munich Marriott Hotel City West
Neuro Campus Hotel DAS MORGEN
New Century Hotel Frankfurt Offenbach
Niepce Paris Hotel, Curio Collection by Hilton
Nikki Beach Resort & Spa Dubai
Nikki Beach Resort & Spa Porto Heli
Nobu Hotel Barcelona
Normafa Rendezvényház Budapest
Novosibirsk Marriott Hotel
Novotel Duesseldorf City West (Seestern) Hotel
Novotel Wien Hauptbahnhof Hotel
NRW.Bank
Nujuma, a Ritz-Carlton Reserve
NYX Esperia Palace Athens
O.N.E. Hospitality Group
O2 arena Praha
O2 universum
Olympic Sky Restauracja
OREA Hotel Voro
Original Sokos Hotel Vaakuna
OTTO Group
Palais Hansen Kempinski Vienna
Palau de Congressos de Catalunya
Palazzo Versace Dubai
Paris Marriott Champs Elysees Hotel
Paris Marriott Charles de Gaulle Airport Hotel
Paris Marriott Rive Gauche Hotel & Conference Center
Park Hotel Vitznau
Park Hyatt Mallorca
Park Hyatt Marrakech
Park Hyatt Paris-Vendôme
Park Hyatt Zurich
Park Inn by Radisson Amsterdam City West
Park Inn by Radisson Poznan
Park Inn by Radisson Vilnius Airport Hotel & Conf. Centre
Pathé De Munt
Pathé Theater Amersfoort
Patinoire de Malley
Peters Kochwelt
Pical Resort, Valamar Collection
Pilsner Urquell International
Platzl Hotel
Powerscourt Hotel Resort & Spa
Prague Marriott Hotel
Protea Hotel by Marriott Ikeja Select
Pullman Berlin Schweizerhof
PUR Hurden
Puskás Aréna
PWC PricewaterhouseCoopers
QO Amsterdam
Radisson Blu Béke Hotel, Budapest
Radisson Blu Hotel & Residences, Zakopane
Radisson Blu Hotel Reussen, Andermatt
Radisson Blu Hotel, Basel
Radisson Blu Hotel, Frankfurt
Radisson Blu Hotel, Hamburg
Radisson Blu Hotel, Hannover
Radisson Blu Hotel, Lucerne
Radisson Blu Hotel, Prague
Radisson Blu Hotel, Zurich Airport
Radisson Blu Royal Viking Hotel, Stockholm
Radisson Blu Schwarzer Bock Hotel, Wiesbaden
Radisson Collection Hotel, Berlin
Radisson Collection Hotel, Magdalena Plaza Sevilla
Radisson Middleburg, South Africa
RAMADA Hotel Berlin Alexanderplatz
RCP North, William Henry Duncan Building
Regent Warsaw Hotel
Renaissance Amsterdam Hotel
Renaissance Barcelona Hotel
Renaissance Downtown Hotel, Dubai
Renaissance Hamburg Hotel
Renaissance Lagos Ikeja Hotel
Renaissance Minsk Hotel
Renaissance Paris La Defense Hotel
Renaissance Paris Le Parc Trocadero Hotel
Renaissance Paris Republique Hotel
Renaissance Paris Vendome Hotel
Renaissance Porto Lapa Hotel
Renaissance Warsaw Airport Hotel
Renaissance Zurich Tower Hotel
Résidence Claire-Fontaine
Résidence Plantzette - EMS
Resort Mark Brandenburg
Resort Schwielowsee
Restaurant Lebenswert
Revo
Rheinhotel Dreesen
Rixos Borovoe Hotel
Robinson Club Fleesensee
ROOMERS Hotel Munich
Rosewood Abu Dhabi
Rosewood Yangon
Rotterdam Marriott Hotel
Royal Academy of Engineering
Royal Canberra Golf Club
Royal College of Physicians
Royal Garden Hotel, London
Royal Hideaway Corales Suites
Royal Palace Riyadh
Royal Savoy Lausanne
RPM Seafood
Saudi Aramco
Scandic Berlin Kurfürstendamm
Scandic Berlin Potsdamer Platz
Scandic Frankfurt Hafenpark
Scandic Frankfurt Museumsufer
Scandic Hamburg Emporio
Scandic Nürnberg Central
Scenic Eclipse II
Schloss Bellevue
Schloss Benkhausen
Schloss Fuschl Resort & Spa
Searcys at the Gherkin
Seehotel Zarrentin
Seminarhotel Bocken
Setif Algeria Courtyard by Marriott
Seven Visions The Dvin Hotel & Places
Shangri-La Hotel Doha
Shaza Doha
Sheraton Astana Hotel
Sheraton Berlin Grand Hotel Esplanade
Sheraton Bratislava Hotel
Sheraton Cairo Hotel & Casino
Sheraton Duesseldorf Airport Hotel
Sheraton Frankfurt Airport Hotel and Conference Center
Sheraton Frankfurt Congress Hotel
Sheraton Grand Doha Resort & Convention Hotel
Sheraton Grand Hotel & Spa, Edinburgh
Sheraton Heathrow Hotel
Sheraton Munich Arabellapark Hotel
Sheraton Nouakchott Hotel
Sheraton Nur-Sultan Hotel
Sheraton Oman
Sheraton Riyadh Hotel & Towers
Sheraton Sopot Hotel
Sheraton Towers Singapore
Sheraton Warsaw Hotel
Shusha Hotel
Siau Ibiza Hotel
SIDE Hotel
Singapore Airlines
Skopje Marriott Hotel

Worldwide | References

SLS Dubai Hotel & Residences
Sofitel Frankfurt Opera
Sofitel Hotel München Bayerpost
Sofitel Legend The Grand Amsterdam
Sopwell House
Sportgastro AG
St. Pancras Renaissance London
Staatlicher Hofkeller
Stademos Mediterranean Beach Hotel
Stadtsparkasse Düsseldorf
Starling Hotel Geneva
Steigenberger Airport Hotel, Frankfurt
Steigenberger Bellerive au Lac
Steigenberger Frankfurter Hof
Steigenberger Graf Zeppelin
Steigenberger Hotel Am Kanzleramt, Berlin
Steigenberger Hotel Bad Homburg
Steigenberger Hotel de Saxe
Steigenberger Hotel Hamburg
Steigenberger Icon Parkhotel Düsseldorf
Story Le Carrousel
Studierendenwerk Stuttgart
Stuttgart Marriott Hotel Sindelfingen
Sugar Beach, a Viceroy Resort
Swiss Life Karriere-Campus Hannover
Swissôtel Marianske Lazne
Swissôtel Tallinn
Swissôtel The Bosphorus
Swissôtel Wellness Resort Alatau Almaty
Symphony Style Kuwait
Taj Dubai
Taj Exotica Resort & Spa, The Palm, Dubai
Taj Mahal, New Delhi
Taj Palace New Delhi, India
Taj Resort & Convention Centre, Goa
Taj Skyline, Ahmedabad
Taj Wellington Mews, Chennai
Taylor Wessing
Tennis-Club 1899 e. V. Blau-Weiss
The Academy Of Medical Sciences
The Address Downtown Dubai
The Address Dubai Mall
The Address Dubai Marina
The Address Montgomerie Dubai
The Alexander, a Luxury Collection Hotel, Yerevan
The Alpina Gstaad
The American Club, Singapore
The Balmoral Hotel Edinburgh, UK
THE BVLGARI HOTEL LONDON
The Capitol Kempinski Hotel Singapore
The Carlton Hotel
The Charles Hotel
The Dunloe Hotel & Gardens
The Europe Hotel & Resort
THE FONTENAY Hamburg
The H Dubai
The Hotel Maria
The ICC Birmingham, UK
The ICON Hotel & Lounge
The J.M. Smucker Co.
The Joule
The Lake Spa Resort
The Landmark London
The Langham, London
The Lapa Park Hotel
The London EDITION
The Ned
The Nile Ritz-Carlton, Cairo
The Parkgate Hotel
The President Hotel Prague
The Ritz-Carlton Riyadh, Saudi Arabia
The Ritz-Carlton, Almaty
The Ritz-Carlton, Astana
The Ritz-Carlton, Baku
The Ritz-Carlton, Berlin
The Ritz-Carlton, Budapest
The Ritz-Carlton, Doha
The Ritz-Carlton, Dubai
The Ritz-Carlton, Herzliya
The Ritz-Carlton, Macau
The Ritz-Carlton, Moscow
The Ritz-Carlton, Naples
The Ritz-Carlton, Riyadh
The Ritz-Carlton, San Francisco
The Ritz-Carlton, St. Thomas
The Ritz-Carlton, Toronto
The Ritz-Carlton, Vienna
The Ritz-Carlton, Washington, D.C.
The Ritz-Carlton, Wolfsburg
The Royal Hashemite Court
The Savoy
The St. Regis Cairo
The St. Regis Doha
The St. Regis Macao, Cotai Central
The St. Regis Red Sea Resort
The Torch Doha
The Westin Grand Frankfurt
The Westin Hamburg
Tiger & Palmen, Palmengarten Gesellschaftshaus
Tirana Marriott Hotel
Trans World Hotel Auefeld, Hann. Münden
Trans World Hotel Columbus
Trans World Hotel Kranichhöhe, Much
Traube Tonbach
Union Investment
Vienna House Andel's Prague
Vienna House Andel's Berlin
Vienna Marriott Hotel
VILA VITA Pannonia
Villa Hammerschmidt
Villa Wellenrausch Lübeck
Volksbank Ruhr Mitte eG
Voronezh Marriott
Voronezh Marriott
W Doha Hotel & Residences
W Hotel Amman
W Hotel Amsterdam
W Melbourne
W'Ray Construction Pte Ltd
Waldhaus Flims, Alpine Grand Hotel & Spa
Warner Hotels - Holme Lacy House
Warsaw Marriott Hotel
Wasserturm Hotel Cologne Curio Collection
Wellness hotel Vista
Wequassett Resort & Golf Club
Widder Hotel
Winton Capital Management Limited
W'Ray Construction Pte Ltd
Wychmere Beach Club
Wyndham Garden Lahnstein Koblenz
Wyndham Grand Regency Doha
Wyndham Stuttgart Airpot Messe
Yotel Glasgow
Zonar Zagreb
Zurich Insurance Group
Zurich Marriott Hotel
Zwei, Mannheim

Worldwide | References | Cities

Aberdeen
Abu Dhabi
Abu Samra
Accra
Addis Ababa
Agadir
Ahmedabad
Al Aqah, Fujairah
Al Baleed Salalah
Alicante
Almaty
Amersfoort
Amman
Amsterdam
Andermatt
Ankara
Aschaffenburg
Ascona
Astana
Athen
Augsburg
Bad Homburg
Baden-Baden
Bahrain
Baie Lazare Mahé Island
Baku
Barcelona
Basel
Bassecourt
Batumi
Beaufort, Killarney, Co. Kerry
Beijing
Beilngries
Ben Guerir
Benkhausen
Berchtesgaden
Berg
Bergisch Gladbach, Cologne
Berkshire
Berlin
Bern
Bilbao
Birmingham
Bonn
Bratislava
Brisbane
Bristol
Brno
Broadbeach, Queensland
Brussels
Bucharest
Budapest
Burton upon Trent
Cairo
Caldes de Malavella, Girona
Calgary
Cancún
Canyamel, Mallorca
Cardiff
Casablanca
Castillo Caleta de Fuste, Las Palmas
Ceuta
Chandigarh
Chicago, Illinois
Cologne
Columbus, Indianapolis
Constantine
Copenhagen
Dallas
Dar es Salaam
Dharahn
Djibloho
Doha
Dolní Morava
Douala
Dresden
Dubai
Dublin
Durham
Dusseldorf
Edinburgh
Edmonton
EL Sittard
Essen
Farnborough, Hampshire
Fes
Fleesensee, Göhren-Lebbin
Flims
Fort Worth, TX
Frankfurt
Fribourg
Fujairah
Fuschlsee-Salzburg
Gelsenkirchen
Geneva
Genova
Glasgow
Grimisuat
Gstaad
Gütersloh
Hamburg
Hannover
Harwich
HarwichPort, MA
Heidelberg
Heiligenhaus
Helsinki
Hereford
Hertforshire
Herzliya
Hong Kong
Horgen
Hurden
Hurst, Berkshirekshire
Ibiza
Ibiza, Santa Eulalia del Río
Ikeja GRA Lagos
Ikeja, Lagos
Ilfracombe
Irvine
Istanbul
Jeddah
Jerewan
Johannesburg
Jongny s/ Vevey, Vaud
Kiel
Kiev
Kigali
Killarney
Königstein, Frankfurt
Konstanz
Krasnodar
Kuwait City
Lahnstein, Rhineland-Palatinate
Langenthal
Lausanne
Le Brassus
Leipzig
Lenggries
Liepaja
Limassol
Liptovská Osada
Liverpool
Ljubljana
London
Los Angeles
Lübeck
Lucerne
Ludwigshafen
Luxemburg
Luxor
Macau
Madrid
Mainz
Makkah
Málaga
Malbork
Mallorca
Manchester
Manila
Mannheim
Marianske Lazne
Marmaris, Mugla
Marrakech
McAllen, Texas
Melbourne
Middleburg
Milano
Minsk
Mirdif, Dubai
Montego Bay
Montreux
Morschen
Moscow
Much
Munich
Münster
Muscat
Naples, Florida
Neubrandenburg
Neuruppin
Neuss
New Delhi
Noordwijk
Nouakchott
Novosibirsk
Novosibirsk
Nuremberg
Nur-Sultan
Obbürgen/Lucerne
Oberwaltersdorf
Olten

Worldwide | References | Cities

Opatija
Orrville, Ohio
Oxford
Pamhagen
Palma de Mallorca
Panaji, Goa
Paris
Peebles
Pilsen
Pontresina
Porec
Port Soller, Mallorca
Porto
Porto Heli
Portorož
Potsdam
Poznan
Prague
Prilly
Punta Cana
Rabat
Red Sea Resort
Reykjavík
Riga
Riviera Maya
Riyadh
Rome
Rostov-on-Don, Rostov Oblast
Rotterdam
Saalfelden
Salzburg
San Francisco
Sarajevo
Sardinia
Saskatchewan
Schlatt
Seeheim
Seengen
Seligenstadt
Seoul
Setif
Seville
Shchuchinsk, Akmola region
Shusha City
Šibenik
Sierre
Singapore
Skopje
Sochi
Sofia
Sopot
Soufriere, Saint Lucia
Sovata
Spring Valley
Springe-Völksen
St. Moritz
St. Petersburg
St. Thomas, U.S. Virgin Islands
Stockholm
Stuttgart
Sydney
Tallinn
Tangier
Tashkent
Tbilisi
Tenerife
Thalwil
Tharamani, Chennai, Tamil Nadu
Tirana
Tokyo
Tonbach
Toronto
Tripoli
Ulm
Ummahat Island, Red Sea Resort
Usk Valley, London
Vancouver
Venice
Vienna
Vienna, Schwechat
Vila Nova de Gaia
Vilamoura, Algarve
Vilnius
Vitznau
Volgograd
Voronezh
Warsaw
Washington, D. C.
Weggis
Weinheim
Weißensberg
Wellington
Werder/Havel
Westerburg/Westerwald
Wiesbaden
Wokingham
Wolfsburg
Würzburg
Yangon
Yarralumla, Canberra
Yerevan
Zadar
Zagreb
Zakopane
Zarrentin am Schaalsee
Zurich

Worldwide | References | Countries

Albania
Algeria
Armenia
Australia
Austria
Azerbaijan
Bahrain
Belgium
Bosnia Herzegovina
Bulgaria
Cameroon
Canada
China
Croatia
Cyprus
Czech Republic
Denmark
Dominican Republic
Egypt
Equatorial Guinea
Estonia
Ethiopia
Finland
France
Georgia
Germany
Ghana
Greece
Hong Kong/China
Hungary
Iceland
India
Israel
Italy
Jamaica
Japan
Jordan
Kazakhstan
Kuwait
Latvia
Libya
Lithuania
Luxemburg
Macedonia
Mauritania
Mexico
Morocco
Myanmar
Netherlands
New Zealand
Nigeria
North Macedonia
Oman
Philippines
Poland
Portugal
Qatar
Republic of Belarus
Romania
Russia
Rwanda
Saudi Arabia
Seychelles
Singapore
Slovakia
Slovenia
South Africa
South Korea
Spain
St. Lucia
Sweden
Switzerland
Tansania
Turkey
UAE United Arab Emirates
UK, Great Britain
UK, Ireland
UK, Scotland
Ukraine
USA
Uzbekistan

www.ventadesign.com

Büchin Design GmbH & Co. KG | Forckenbeckstr. 9-13 | 14199 Berlin | Germany | info@ventadesign.de | Phone: +49-30-28045550 | Fax: +49-30-2804555-28